Technical data sheet

WDK CEE device socket

Item number: 6024009

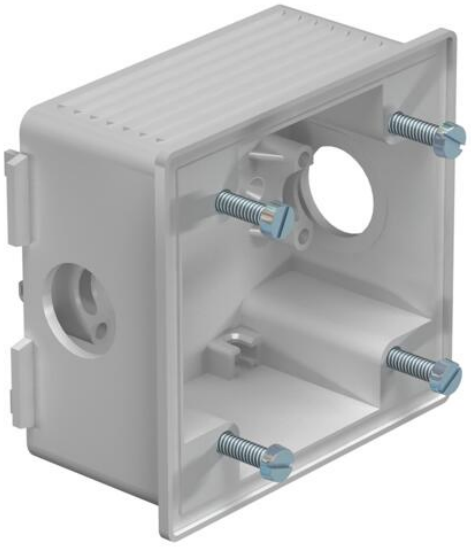

Device socket for mounting CEE sockets in WDK trunking from trunking width 150 mm. The device socket can also be used as a concealed installation socket for CEE devices. Straight version, 16 and 32 A, with 60 x 60 mm hole pattern

Supplied complete with 1 strain relief clip, 1 ED 16 insertion seal, 1 VS 16 closing bung and 4 M5 x 18 cylinder head bolts to fix the socket.

CE

PA/ GF Polyamide, fibreglass reinforced

Master data

Item number	6024009
Type	2392
Description 1	Box, empty
Description 2	for CEE installation
Manufacturer	OBO
Colour	Light grey; RAL 7035
Material	Polyamide, fibreglass reinforced
Smallest sales unit	5
Unit of quantity	Piece
Weight	10.5 kg
Weight unit	kg/100 pc.
CO2 Footprint (GWP) Cradle-to-Gate	0,5945 kg CO2e / 1 Piece

Technical data sheet

WDK CEE device socket

Item number: 6024009

Dimensions

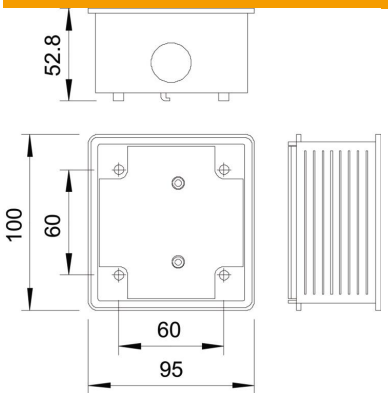

Length	100 mm
Width	95 mm
Height	48 mm

Technical data

Number of units	1
Version for	Open
Halogen-free	yes
With connection compartment	no
ROHS-conformant	yes
Strain relief option	no