Technical data sheet

Hammer-head bolt

Item number: 1148012



Hammer-head bolt for use with CL2008 profile rail

CE 11

St Steel

ZL Zinc slat

Master data

Item number	1148012
Type	CL20HB M6x25 ZL
Description 1	Hammerhead screw
Description 2	for profile rail CL2008
Manufacturer	OBO
Dimension	M6x25mm
Material	Steel
Surface Surface standard	Zinc slat
Smallest sales unit	50
Unit of quantity	Piece
Weight	1.42 kg
Weight unit	kg/100 pc.
CO2 Footprint (GWP) Cradle-to-Gate	0,0121 kg CO2e / 1 Piece

Technical data sheet

Hammer-head bolt

Item number: 1148012

Dimensions

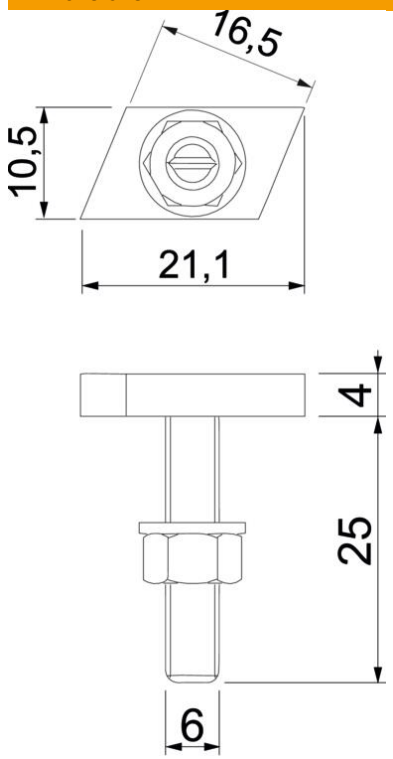

Length	21.1 mm
Width	10.5 mm
Height	4 mm
Dimension L	25 mm

Technical data

Suitable for mounting rail	yes
Thread	M 6 x 25mm
Thread metric	6
ROHS-conformant	yes