Data Sheet | Item Number: 787-892

RS-232 communication cable; Length 1.8 m; for 0787-1675

https://www.wago.com/787-892

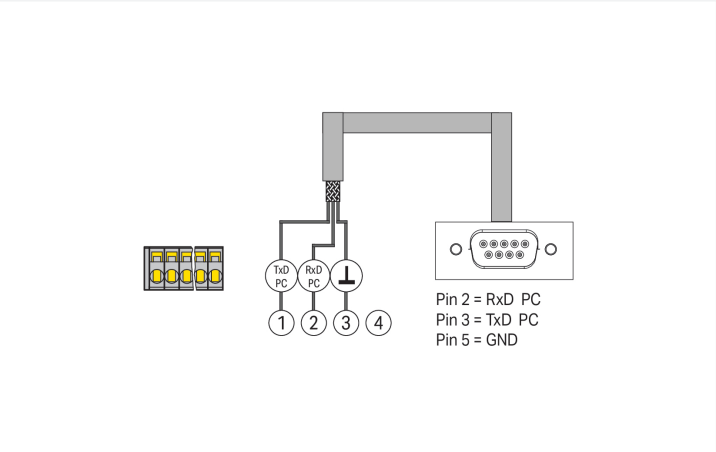

Similar to illustration

Features:

- WAGO's communication cable is used for configuration and visualization via PC or controller.
- It is suitable for 787-1675 devices.
- Download the corresponding PC software for all 787 Series devices at www.wago.com.
- Function blocks for communication with the WAGO I/O System 750 and other control systems are also available.

Notes

Note	The communication cable is not electrically isolated.

Technical data

Signaling and Communication

Signaling	1 x RS-232 cable
Communications	RS-232 serial interface

Safety and protection

Protection type	IP20; per EN 60529

Connection Data

Cable type	3 x 0.34 mm²; shielded

Connection 1

Connection type	Module side (787-1675)
Connection technology	1 x 4-pole female connector (734-104) with strain relief

Continued on next page

Connection 2

Connection type	PC/controller side
Connection technology	1 x 9 pole D-sub socket

Physical data

Cable length	1.8 m

Material data

Fire load	0 MJ
Weight	97 g

Environmental requirements

Ambient temperature (operation)	-10 … +70 °C

Commercial data

Product Group	6 (INTERFACE ELECTRONIC)
PU (SPU)	1 pcs
Packaging type	Box
Country of origin	DE
GTIN	4050821787402
Customs tariff number	85444290900

Product Classification

UNSPSC	26121604
eCl@ss 10.0	27-06-18-90
eCl@ss 9.0	27-06-03-11
ETIM 9.0	EC001408
ETIM 10.0	EC001408
ECCN	NO US CLASSIFICATION

Environmental Product Compliance

RoHS Compliance Status	Compliant,No Exemption

Downloads

Environmental Product Compliance

Compliance Search

Environmental Product Compliance 787-892

 Continued on next page

1 Compatible Products

1.1 Optional Accessories

1.1.1 Cables and connectors

1.1.1.1 Connecting cable

Item No.: 761-9005
USB adapter; with 1m connection cable