Technical data sheet

Hammer-head bolt A4

Item number: 1148418

Hammer-head bolt for use with MS4121 and MS4141 profile rails



CE

A4	Stainless steel
2B	Bright, treated

Master data

Item number	1148418
Type	MS41HB M8x100 A4
Description 1	Hammerhead screw
Description 2	for profile rail MS4121/4141
Manufacturer	OBO
Dimension	M8x100mm
Material	Stainless steel
Surface Surface standard	Bright, treated
Smallest sales unit	20
Unit of quantity	Piece
Weight	7.55 kg
Weight unit	kg/100 pc.
CO2 Footprint (GWP) Cradle-to-Gate	0,3727 kg CO2e / 1 Piece

Technical data sheet

Hammer-head bolt A4

Item number: 1148418

Dimensions

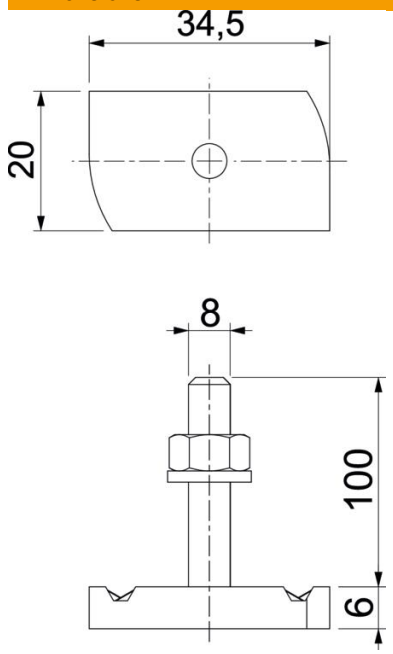

Length	34.5 mm
Width	20 mm
Height	6 mm
Dimension H	6 mm
Dimension L	100 mm

Technical data

Torque	6.2 Nm
Suitable for mounting rail	yes
Thread	M 8 x 100
ROHS-conformant	yes
Washer Ø	16 mm