Read these instructions & save for future use

Emergency bulk head | surface mounted | 3W | AT | incl. pictograms

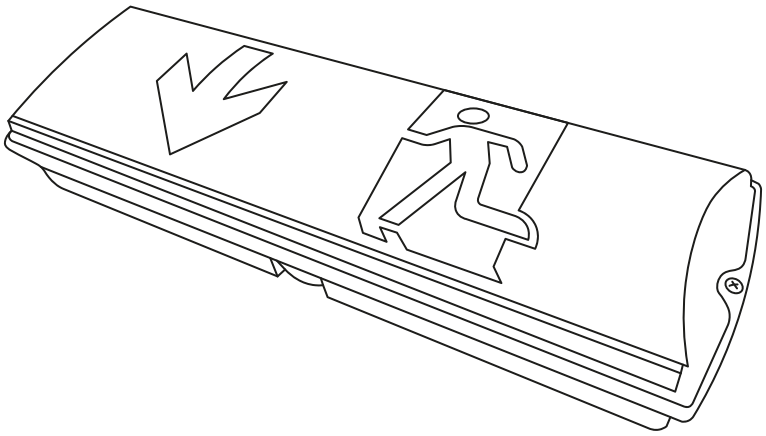

Article number	**600-021**
Brand	**Tronix Lighting**
Type	**Emergency lighting**
Contents of this product	**1x 3W bulk head surface mount**
Technical datasheet	**Digitally available on our webshop**

View instructions and technical data also on our website

TRONIX

Before first use

Before getting started with this product, it is advisable to check the order completeness and any damage. If this is the case, please contact Tronix Lighting.

Description

Emergency lighting is incredibly important for any building, commercial building or office. These fixtures are not only very functional, but are also designed with a focus on visibility and optimal operation.

This set also features an auto test. This automatically periodically tests the light source, both electronic and battery powered.

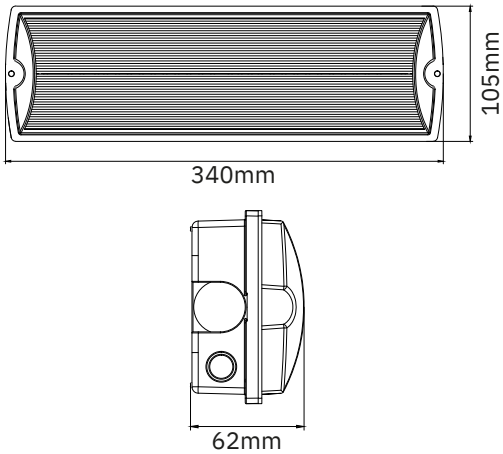

Features

- Periodic auto test according to international standard IEC62034;
- Four tests: Test after commissioning (battery charging, test and charge), short function (3 seconds focusing on condition), monthly test (3 minutes) and annual test (1 of 3 hours).

Installation

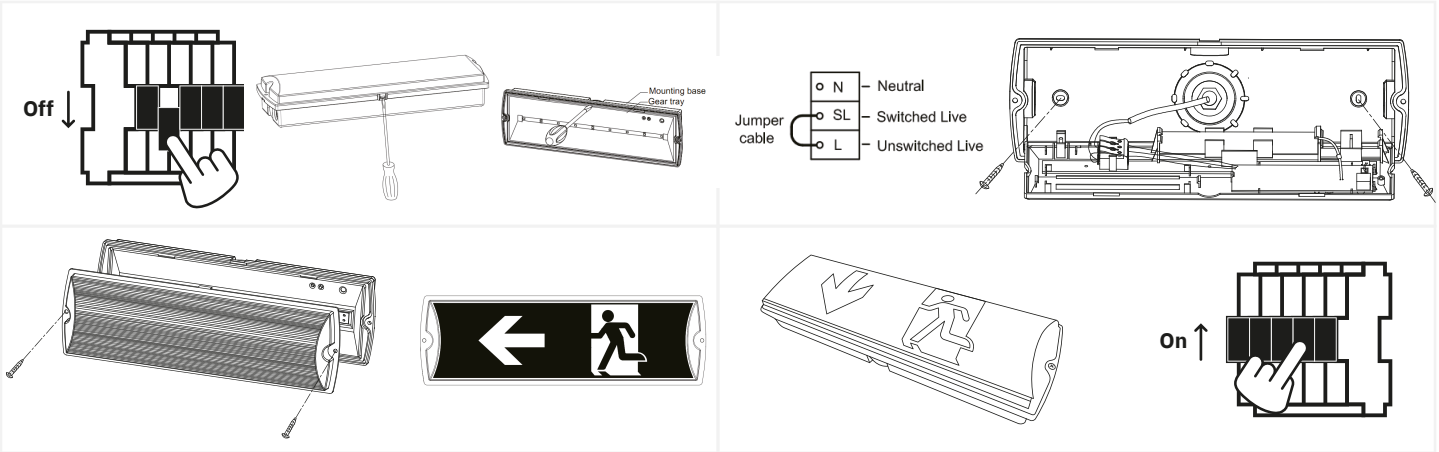

1. Turn off the power and remove the product and associated parts from the packaging. Then remove the cover from the lamp using a flathead screwdriver;
2. Attach the wiring to the frame and connect the battery based on the illustration;
3. Replace the tray. Place the desired decal on the diffuser;
4. Check the complete installation. If everything is in order, you can reactivate the power.

Safety

Safety is a top priority at Tronix Lighting. Therefore, we heartily recommend that you follow the following steps closely:

- Keep this manual carefully for future reference;
- Choose a qualified electrician while installing, maintaining or inspecting this product;
- Never look directly into a light source to avoid possible eye damage;
- Ensure that the respective power group is always on non-active when the product is connected;
- Use only recommended combinations (LED drivers, controllers or dimmers) to avoid injury or damage to the product;
- The light source of this light is not replaceable. Because of this, you must replace the entire fixture towards the end of its lifespan and it is not recommended to open it;
- Led indicator codes (4 second pause to pattern): 1 flash: Battery not connected. 2 flashes: Low voltage battery. 3 flashes: circuit board error. 4 flashes: AC/DC fault. 5 flashes: led lamp error.

Technical problems and repair

Should a product not work properly after installation, or if the product exhibits problems over time, it is advisable to check the following elements:

- Check the wiring and installation of your product;
- Check for the presence of interfering elements such as dust, water or other electronics;
- If possible, try disconnecting the product and testing it in another location to rule out a problem at the location;
- Should you be dealing with a WIFI-based product, check and reset your router's settings.

Should the product still not work after testing, it is recommended to send it in for inspection and/or repair. To do so, please contact Tronix Lighting using nearby details and proof of purchase (packing slip).

CARE SHARE CONNECT

Supplier:

Tronix Lighting B.V

Vluchtoord 41
5406 XP Uden, Netherlands

+31 (0)413 330 380
sales@tronixlighting.com

Terms and symbols (as relevant to product)

The **CE mark** indicates that this product complies with EU regulations on safety, health and environmental protection;

The **WEEE symbol** stands for "Waste Electrical and Electronic Equipment Regulation," a directive on the collection, recycling and recovery of electronic waste;

The **Class II symbol** indicates that this product is double insulated;

- This product has an **IP65 rating**. This means the housing is touch-safe, fully protected from dust and spray-proof (12.5 L/min) regardless of angle.