Technical data sheet

Hammer-head bolt A4

Item number: 1148410

Hammer-head bolt for use with MS4121 and MS4141 profile rails



CE

A4	Stainless steel
2B	Bright, treated

Master data

Item number	1148410
Type	MS41HB M8x30 A4
Description 1	Hammerhead screw
Description 2	for profile rail MS4121/4141
Manufacturer	OBO
Dimension	M8x30mm
Material	Stainless steel
Surface Surface standard	Bright, treated
Smallest sales unit	50
Unit of quantity	Piece
Weight	4.8 kg
Weight unit	kg/100 pc.
CO2 Footprint (GWP) Cradle-to-Gate	0,2318 kg CO2e / 1 Piece

Technical data sheet

Hammer-head bolt A4

Item number: 1148410

Dimensions

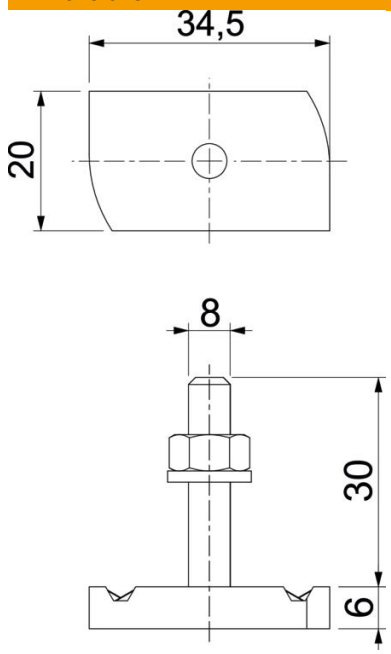

Length	34.5 mm
Width	20 mm
Height	6 mm
Dimension H	6 mm
Dimension L	30 mm

Technical data

Torque	6.2 Nm
Suitable for mounting rail	yes
Thread	M 8 x 30
ROHS-conformant	yes
Washer Ø	16 mm