Technical data sheet

Anchor rail AML3518, slot width 16.5 mm, FS, perforated

Item number: 1119648

Central C profile rail for cable routing, in conjunction with clamp clips with a hammerhead foot. Can also be used as suspension construction for cable support systems.

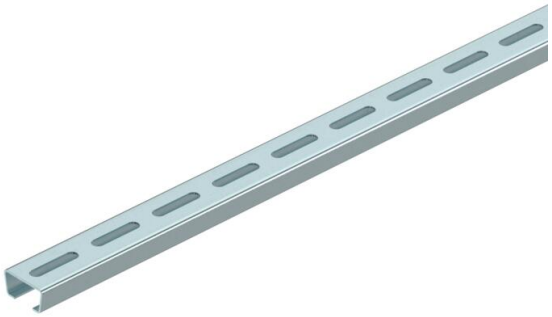

CE 16,5 H E30 E90

St Steel

FS Strip galvanised

Master data

Item number	1119648
Type	AML3518P2000FS
Description 1	Profile rail
Description 2	perforated, slot 16.5mm
Manufacturer	OBO
Dimension	2000x35x18
Material	Steel
Surface	Strip galvanised
Surface standard	DIN EN 10346
Smallest sales unit	2
Unit of quantity	Metre
Weight	82.5 kg
Weight unit	kg/100 m
CO2 Footprint (GWP) Cradle-to-Gate	2,0259 kg CO2e / 1 Meter

Technical data sheet

Anchor rail AML3518, slot width 16.5 mm, FS, perforated

Item number: 1119648

Dimensions

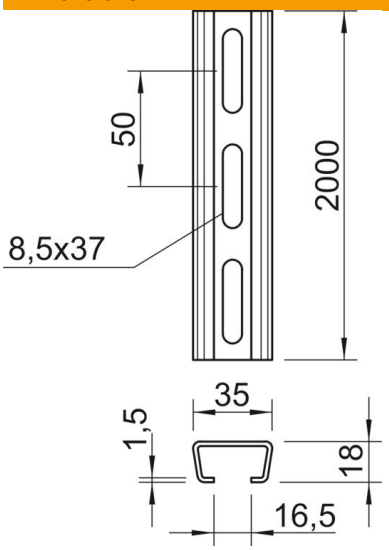

Length	2,000 mm
Width	35 mm
Height	18 mm
Dimension L	2,000 mm

Technical data

Breakable	no
Type of perforation	Perforated back
Version for	Single profile
Drill hole spacing, centre	50 mm
Bundle	20 m
Maintain electrical functions	yes
Material thickness	1.5 mm
With perforation	yes
With toothing	no
Profile shape	C profile
ROHS-conformant	yes
Slot width	16.5 mm
Static value A	1.01 cm²
Static value Iy	0.44 cm⁴
Static value Iz	1.84 cm⁴
Static value Wy	0.42 cm³
Static value Wz	1.05 cm³