Data Sheet | Item Number: 771-9993/007-201

pre-assembled interconnecting cable; Eca; Socket/plug; 3-pole; Cod. A; H05VV-F 3G 2.5 mm²; 2 m; 2,50 mm²; black

https://www.wago.com/771-9993/007-201

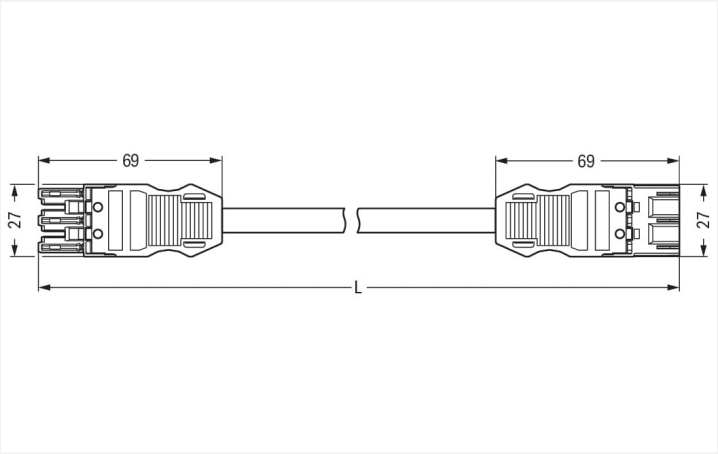

Color: ■ black

Dimensions in mm

Cable assembly *WINSTA*® MIDI with protection type IP20

The *WINSTA*® MIDI cable assembly 3-pole supports fast, reliable installation. The pluggable installation connectors with spring pressure connection technology function entirely without screw connections. They allow fast, efficient, error-free installation in a large number of possible uses. The color coding and mechanical coding of the pluggable installation connector ensure error-free installation of the individual components – including protection against mismating. The pluggable installation connector is protected in accordance with protection type IP20 (When mated: IP2xC (These compact connectors are not designed for use in open, easily accessible areas!)). That results in the fact that users' fingers will never come into contact with energised elements. The *WINSTA*® MIDI pluggable installation connector with A coding in black or white is usually used for general mains applications in power distribution. This pluggable installation connector is used for electrical currents up to 20 A. Thus the product is also suitable for high power loads. *WINSTA*® MIDI with Push-in CAGE CLAMP® spring pressure connection technology is used in a broad range of individual products you can use for quick, easy and maximally flexible electrical installation. According to the European CPR, the fire class of the cables used for construction is decisive for building safety as well. For houses with average safety requirements, cable assemblies with fire class E are suitable.

Pluggable connections instead of screw connections – cable assemblies from WAGO

The cable is pre-assembled with a socket and a plug. The WINSTA® Pluggable Connection System allows pluggable electrical installation. This saves time, lowers costs, and reduces the need for servicing. Choose quality and durability – with protection against mismating from WAGO makes the installation of electrical components substantially easier.

- pluggable installation connectors with protection against mismating
- simple circuits
- with A coding for use in a large number of general mains applications
- custom-engineered solutions
- convenient installation and commissioning

Notes

Note	Cables with a different fire class can be found in the eShop.

Electrical data

Ratings per	IEC/EN 60664-1		
Overvoltage category	III	III	II
Pollution degree	3	2	2
Nominal voltage	250 V	-	-
Rated surge voltage	4 kV	-	-
Rated current	20 A	-	-

General information	
Note on contact resistance	approx. 1 mΩ of contact resistance approx. 0.25 mΩ contact transition plug/socket

Connection data

Total number of potentials	3
PE function	Preceding PE contact

Connection 1

Pole number	3
Wire cross-section	2.5 mm²
Connection type	Socket - Plug

Physical data

Pin spacing	10 mm / 0.394 inches
Width	27 mm / 1.063 inches
Height	12.9 mm / 0.508 inches
Total length	2 m

Mechanical data

Use	General mains applications
Coding	A
Variable coding	Yes
Marking	L ⏚ N
Potential marking	L ⏚ N
Mating force of a plug-in connection	approx. 20 … 70 N (depending on pole number)
Retention force of a plug-in connection	when locked: > 80N
Unmating force of a plug-in connection	when unlocked: approx. 20 … 70 N (depending on pole number)
Number of mating cycles	200, without resistive load
Connection type	Socket - Plug
Type of pre-assembled cable	Interconnecting cable
Cable type	H05VV-F 3G2.5
Protection type	IP20; When mated: IP2xC (These compact connectors are not designed for use in open, easily accessible areas!)

Plug-in connection

Mismating protection	Yes
Note on mismating protection	All *WINSTA*® components are 100% protected against mismating when: a.) plugging different numbers of poles b.) plugging while rotated 180 c.) plugging while laterally staggered d.) plugging one pole
Locking lever	Can be retrofitted
Locking of plug-in connection	Locking lever
Note on locking system	All connectors for mounted installations (snap-in versions for lighting fixtures or devices, all types of PCB and distribution connectors) are factory-equipped with locking levers to ensure plugs and sockets are securely locked. Additional locking levers are only required for flying leads (plug/socket).

Material data

Note (material data)	Information on material specifications can be found here
Color	black
Insulation material (main housing)	Polyamide (PA66)
Flammability class per UL94	V0
Fire class per EN 50575	E_{ca}
Contact material	Copper or copper alloy; surface-treated
Contact Plating	Tin
Fire load	59.431 MJ
Connector color	black
Strain relief color	black
Printing color of strain relief	white

 Continued on next page

Material data

Sheathed cable color	black
Printing color of sheathed cable	white
Halogen-free	No
Silicon-free	Yes
Sheath material	PVC
Rubber cable	No
Weight	337.3 g
Copper weight of the pipe	0.072 kg/m

Environmental requirements

Processing temperature	-5 … +40 °C
Continuous operating temperature	-35 … +85 °C
Note on continuous operating temperature	Cable for temperatures ≤ 70 °C (including halogen-free) Insulating parts for temperatures ≤ 105 °C

Commercial data

eCl@ss 10.0	27-44-06-04
eCl@ss 9.0	27-44-06-04
ETIM 9.0	EC002587
ETIM 8.0	EC002587
PU (SPU)	1 pcs
Packaging type	unpacked
Country of origin	DE
GTIN	4044918585088
Customs tariff number	85444290900

Environmental Product Compliance

RoHS Compliance Status	Compliant,No Exemption

Approvals / Certificates

General approvals

Approval	Standard	Certificate Name
CCA DEKRA Certification B.V.	EN 61535	NTR NL-7972
KEMA/KEUR DEKRA Certification B.V.	EN 61535	71-123834

Declarations of conformity and manufacturer's declarations

Approval	Standard	Certificate Name
EU-Declaration of Conformity WAGO GmbH & Co. KG	-	-
UK-Declaration of Conformity WAGO GmbH & Co. KG	-	-

 Continued on next page

Downloads

Environmental Product Compliance

Compliance Search

Environmental Product Compliance
771-9993/007-201

Documentation

Bid Text

771-9993/007-201	19.02.2019	xml 2.90 KB	
771-9993/007-201	04.12.2014	doc 24.50 KB	
ausschreiben.de 771-9993/007-201			

CAD/CAE-Data

CAD data

2D/3D Models
771-9993/007-201

CAE data

EPLAN Data Portal
771-9993/007-201

WSCAD Universe
771-9993/007-201

ZUKEN Portal
771-9993/007-201

1 Compatible Products

1.1 Required Accessories

1.1.1 Locking system

1.1.1.1 Locking system

Item No.: 770-101
Locking lever; for flying leads; for manual operation; black

Item No.: 770-121
Locking lever; for flying leads; for manual operation; white

Item No.: 770-111
Locking lever; for flying leads; for tool operation; black

Item No.: 770-131
Locking lever; for flying leads; for tool operation; white

 Continued on next page

1.2 Optional Accessories

1.2.1 Cover

1.2.1.1 Cover

Item No.: 770-201
Lockout cap; 12-pole, separable; for sockets; Plastic; black

Item No.: 770-221
Lockout cap; 12-pole, separable; for sockets; Plastic; white

Item No.: 770-360
Lockout cap; for plugs; 5-pole; separable; yellow

Item No.: 897-2003
Protective cap; Type2; for sockets and plugs; PVC; red

1.2.2 Installation

1.2.2.1 Mounting accessories

Item No.: 770-310
Mounting carrier; 2- to 5-pole; for flying leads; black

1.2.3 Marking

1.2.3.1 Marker

Item No.: 770-450/000-006
Marker card; Plastic; blue

Item No.: 770-450/000-001
Marker card; Plastic; green

Item No.: 770-450/000-012
Marker card; Plastic; orange

Item No.: 770-450/000-005
Marker card; Plastic; red

Item No.: 770-450
Marker card; Plastic; white

Item No.: 770-450/000-002
Marker card; Plastic; yellow

1.2.3.2 Marking strip

Item No.: 210-334
Marking strips; as a DIN A4 sheet; Strip width 5 mm; Strip length 182 mm; plain; Self-adhesive; white