Technical data sheet

Hook-head screw A4

Item number: 1148268

Hook-head screw for use with MS5030 profile rail



22

A4	Stainless steel
2B	Bright, treated

Master data

Item number	1148268
Type	MS50HB M10x30 A4
Description 1	Hook-head screw
Description 2	for profile rail MS5030
Manufacturer	OBO
Dimension	M10x30mm
Material	Stainless steel
Surface Surface standard	Bright, treated
Smallest sales unit	50
Unit of quantity	Piece
Weight	7.7 kg
Weight unit	kg/100 pc.
CO2 Footprint (GWP) Cradle-to-Gate	0,3736 kg CO2e / 1 Piece

Technical data sheet

Hook-head screw A4

Item number: 1148268

Dimensions

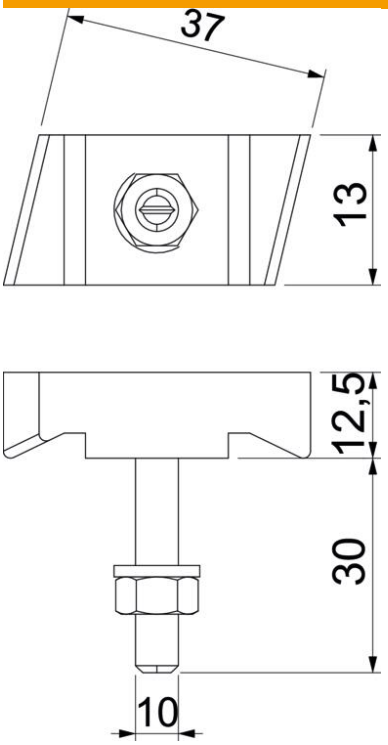

Length	43.3 mm
Width	13 mm
Height	10 mm

Technical data

Suitable for mounting rail	yes
Thread	M10x30mm
Thread metric	10
ROHS-conformant	yes