Technical data sheet

Anchor rail AMS3518, slot 16.5 mm, A2, perforated

Item number: 1118421

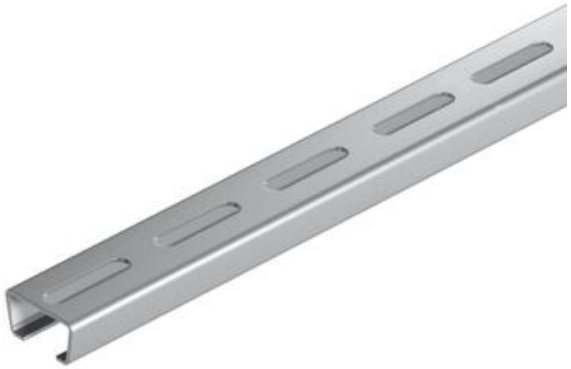

Central C profile rail for cable routing, in conjunction with clamp clips with a hammerhead foot. Can also be used as suspension construction for cable support systems.

CE 16,5 H

A2	Stainless steel
2B	Bright, treated

Master data

Item number	1118421
Type	AMS3518P1000A2
Description 1	Profile rail
Description 2	perforated, slot 16.5mm
Manufacturer	OBO
Dimension	1000x35x18
Material	Stainless steel 1.4301
Surface Surface standard	Bright, treated
Smallest sales unit	1
Unit of quantity	Metre
Weight	107 kg
Weight unit	kg/100 m
CO2 Footprint (GWP) Cradle-to-Gate	5,5632 kg CO2e / 1 Meter

Technical data sheet

Anchor rail AMS3518, slot 16.5 mm, A2, perforated

Item number: 1118421

Dimensions

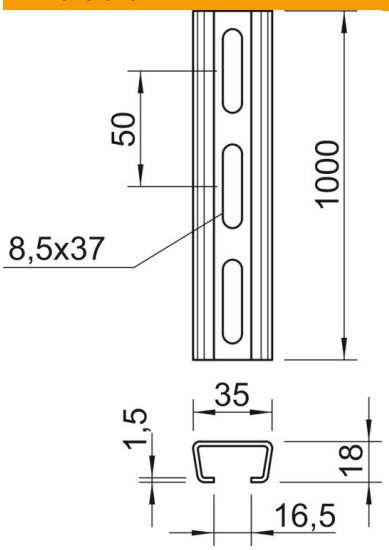

Length	1,000 mm
Width	35 mm
Height	18 mm
Dimension L	1,000 mm

Technical data

Breakable	no
Type of perforation	Perforated back
Version for	Single profile
Drill hole spacing, centre	50 mm
Maintain electrical functions	no
Material thickness	2 mm
With perforation	yes
With toothing	no
Profile shape	C profile
ROHS-conformant	yes
Slot width	16.5 mm
Static value A	1.31 cm²
Static value Iy	0.54 cm⁴
Static value Iz	2.31 cm⁴
Static value Wy	0.52 cm³
Static value Wz	1.32 cm³