Technical data sheet

Anchor rail AML3518, slot width 16.5 mm, FT, perforated

Item number: 1112755



Central C profile rail for cable routing, in conjunction with clamp clips with a hammerhead foot. Can also be used as suspension construction for cable support systems.

CE 16,5 H E30 E90

St Steel

FT Hot-dip galvanised

Master data

Item number	1112755
Type	AMS3518P1000FT
Description 1	Profile rail
Description 2	perforated, slot 16.5mm
Manufacturer	OBO
Dimension	1000x35x18
Material	Steel
Surface	Hot-dip galvanised
Surface standard	DIN EN ISO 1461
Smallest sales unit	1
Unit of quantity	Metre
Weight	122 kg
Weight unit	kg/100 m
CO2 Footprint (GWP) Cradle-to-Gate	2,4412 kg CO2e / 1 Meter

Technical data sheet

Anchor rail AML3518, slot width 16.5 mm, FT, perforated

Item number: 1112755

Dimensions

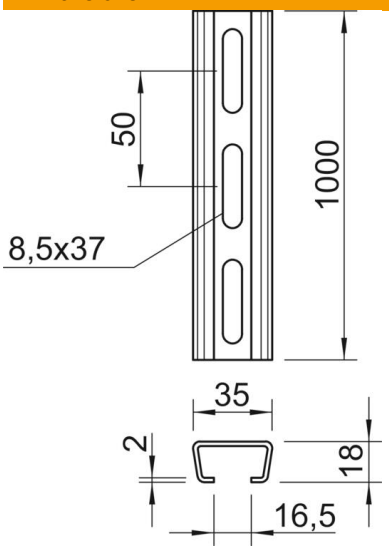

Length	1,000 mm
Width	35 mm
Height	18 mm
Dimension L	1,000 mm

Technical data

Breakable	no
Type of perforation	Perforated back
Version for	Single profile
Drill hole spacing, centre	50 mm
Maintain electrical functions	yes
Material thickness	2 mm
With perforation	yes
With toothing	no
Profile shape	C profile
ROHS-conformant	yes
Slot width	16.5 mm
Static value A	1.01 cm²
Static value Iy	0.44 cm⁴
Static value Iz	1.84 cm⁴
Static value Wy	0.42 cm³
Static value Wz	1.05 cm³