VAIA Wall-mounted basin mixer without pop-up waste - Brushed Dark Platinum

VAIA

36 712 819 Product version from 3/13/2017

- 190mm projection
- fixed spout
- circular, air-enriched flow
- hole diameter valve 35 mm
- hole diameter spout 35 mm
- rosettes Ø 60 mm
- max. flow 5.7 l/min
- lead-free
- This product can help a building meet the requirements of Green Building Rating Systems, e.g. LEED®, BREEAM®, DGNB
- WRAS

Brushed Dark Platinum	36 712 819-99
Chrome	36 712 819-00
Brushed Platinum	36 712 819-06
Platinum	36 712 819-08
Dark Chrome	36 712 819-19
Brushed Durabrass (23kt Gold)	36 712 819-28
Brushed Gold (PVD)	36 712 819-37
Brushed Dark Brass (PVD)	36 712 819-39
Brushed Bronze (PVD)	36 712 819-42
Brushed Dark Bronze (PVD)	36 712 819-43
Brushed Champagne (22kt Gold)	36 712 819-46
Champagne (22kt Gold)	36 712 819-47

Required miscellaneous

Concealed wall-mounted mixer centred spout - 35 700 970 90
- min. recess depth 85 mm
- max. recess depth 145 mm

Required miscellaneous

Concealed wall-mounted mixer variable positioning - 35 720 970 90
- min. recess depth 85 mm
- max. recess depth 145 mm

VAIA Wall-mounted basin mixer without pop-up waste - Brushed Dark Platinum

36 712 819 Product version from 3/13/2017

mm [inches]

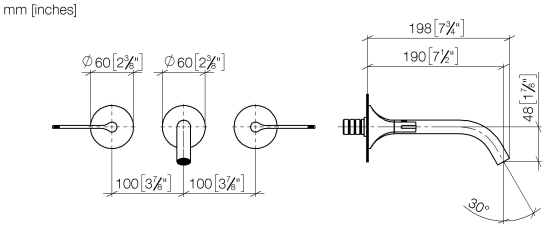

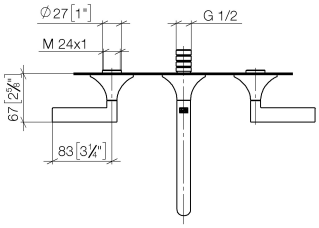

Flow rate chart

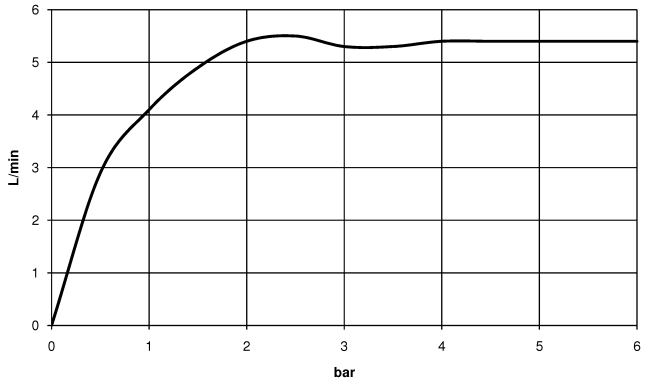

Codes & Standards

DIN 4109	ISO 3822	Scottish Water Byelaws	UK Water Supply Regulations

Ü-Zeichen

Certificates and sustainability

LGA_29	WRAS_2312	EPD-DOR-20230287-IBA1-EN Environmental.product-declarat

VAIA Wall-mounted basin mixer without pop-up waste - Brushed Dark Platinum

36 712 819 Product version from 3/13/2017

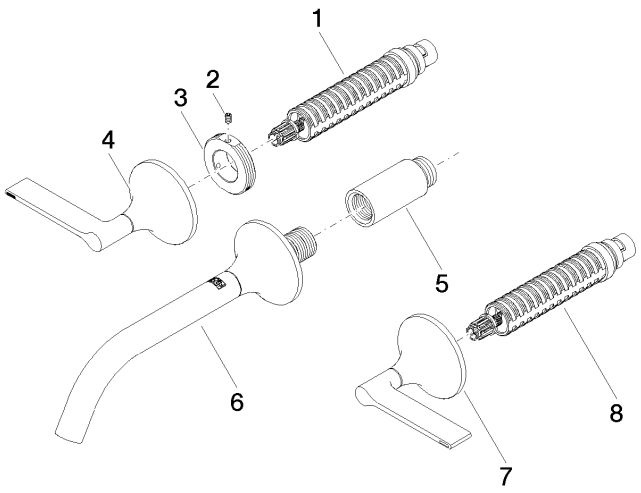

Spare parts list

No.	Item Number	Name	Quantity used	Delivery time
2	09 31 11 008 90	Mounting Threaded pin with hexagon socket M4 x 6 mm -	2.00	14
5	09 24 03 081 10 90	Extension 1/2" x 50 mm -	1.00	14
3	09 21 02 163 90	Mounting Ø 42 x 18 mm -	2.00	14
1	90 90 03 157 00 90	Head part clockwise closing 1/2" -	1.00	14
6	13 800 809-99	VAIA Wall-mounted basin spout without pop-up waste - Brushed Dark Platinum	1.00	40
4	90 20 80 013 00-99	Handle for side valve Hot Lever 113 x 68 x 60 mm - Brushed Dark Platinum	1.00	40
8	90 90 03 156 00 90	Head part anti-clockwise closing 1/2" -	1.00	14
7	90 20 80 012 00-99	Handle for side valve Cold Lever 113 x 68 x 60 mm - Brushed Dark Platinum	1.00	40

We reserve the right to change designs, product range and technical specifications without prior notice.
More information can be found at: www.dornbracht.com +49 (0) 2371 8899 900 mail@dornbracht.com