Data Sheet | Item Number: 891-8995/206-505

pre-assembled connecting cable; Eca; Plug/open-ended; 5-pole; Cod. B; (H)05VV-F 5x1,5 mm²; 5 m; 1,50 mm²; light green

https://www.wago.com/891-8995/206-505

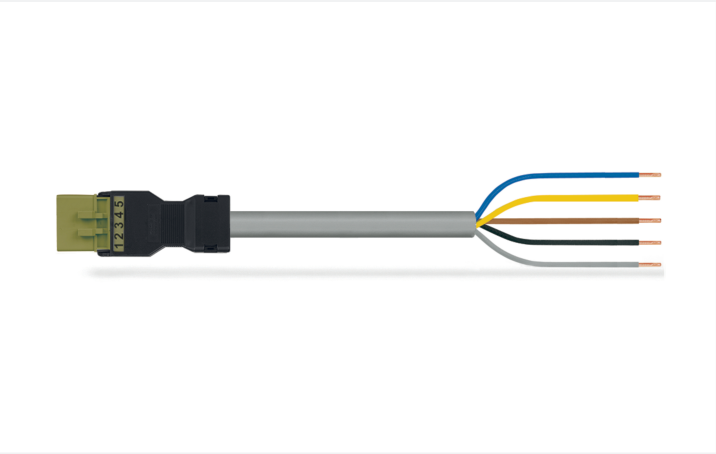

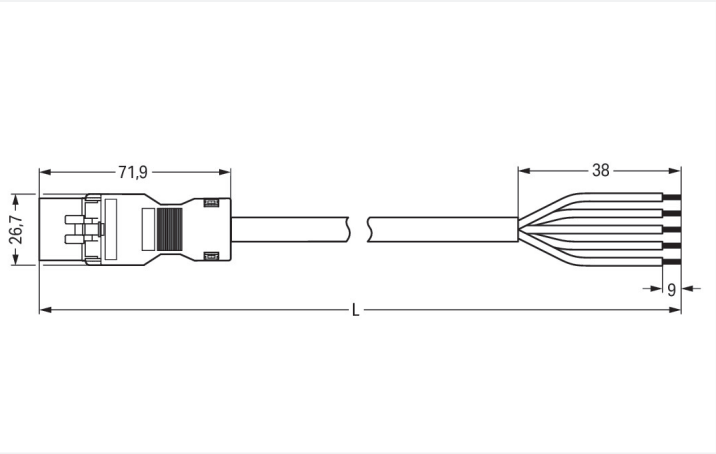

Color: ■ light green

Dimensions in mm

Cable assembly *WINSTA*® MINI with protection type IP20

Use effective pluggable connections instead of laborious screw connections: With the *WINSTA*® MINI cable assembly 5-pole. WAGO pluggable installation connectors can be used when requirements repeat or are distributed on a specified pattern, for example for installing grid lighting or flush-mount lighting. The mechanical coding and color coding of the pluggable installation connector ensure error-free installation of the individual components – including protection against mismating. Pluggable installation connectors with B coding from the *WINSTA*® MINI line are available in pink, light green, or gray, allowing you to distinguish different circuits, for example for pumps, lighting, or sun blinds. Your own pole marking is possible, too. *WINSTA*® MINI follows the trend towards miniaturisation. Our smallest pluggable connection system is especially suitable for lights, for instance, since due to LED technology, these offer significantly less space for the connection technology. Building safety must be ensured at all times, even after the electrical installation stage. The mandatory safety requirements in connection with EU CPR are fully satisfied by this product through fire class E.

Fast, error-free assembly thanks to cable assemblies from WAGO

The cable assembly is equipped with a plug and a free end. The WINSTA® Pluggable Connection System is perfectly tailored to the very strict requirements of building installation. It makes electrical installation pluggable, and therefore faster, more reliable, and error-free. Using this pre-assembled system reduces time spent on assembly and errors during installation at the construction site. Now you can also lower installation expenses without compromising quality and safety: with fire class E reduces the need for servicing and prevents unnecessary downtime.

- pluggable installation connectors with protection against mismating
- easy tool-free operation, a wide range of coding options
- with B coding for controllers such as lighting fixtures and sun blinds
- flexible installation to save space
- fast, secure installation

Notes

Note	Cables with a different fire class can be found in the eShop.
Variants:	Other pole markings Other versions (or variants) can be requested from WAGO Sales or configured at https://configurator.wago.com/.

Electrical data

Ratings per	IEC/EN 60664-1		
Overvoltage category	III	III	II
Pollution degree	3	2	2
Nominal voltage	400 V	-	-
Rated impulse withstand voltage	6 kV	-	-
Rated current	16 A	-	-

Ratings per IEC/EN – Notes	
Rated current (note)	13 A for 3-pole load 10 A for 4- and 5-pole load

General information	
Note on contact resistance	approx. 1 mΩ of contact resistance approx. 0.25 mΩ contact transition plug/socket

Connection Data

Total number of potentials	5
Conductor preparation	ultrasonically tip-bonded

Connection 1	
Strip length	9 mm / 0.35 inches
Pole number	5
Wire cross-section	1.5 mm²
Strip length (outer insulation)	38 mm
Connection type	Plug - free end

Physical data

Pin spacing	4.4 mm / 0.173 inches
Width	26.7 mm / 1.051 inches
Height	15.8 mm / 0.622 inches
Total length	5 m

Mechanical data

Use	Control technology
Coding	B
Variable coding	No
Marking	1 2 3 4 5
Potential marking	1 2 3 4 5
Mating force of a plug-in connection	approx. 20 … 70 N (depending on pole number)
Retention force of a plug-in connection	when locked: > 80N
Unmating force of a plug-in connection	when unlocked: approx. 20 … 70 N (depending on pole number)
Number of mating cycles	200, without resistive load
Connection type	Plug - free end
Type of pre-assembled cable	Connecting cable
Cable type	H05VV-F 5x1.5
Protection type	IP20; IP40 when mated

 Continued on next page

Plug-in connection

Mismating protection	Yes
Note on mismating protection	All *WINSTA*® components are 100% protected against mismating when: a.) plugging different numbers of poles b.) plugging while rotated 180 c.) plugging while laterally staggered d.) plugging one pole
Locking lever	Can be retrofitted
Locking of plug-in connection	Locking lever
Note on locking system	All connectors for mounted installations (snap-in versions for lighting fixtures or devices, all types of PCB and distribution connectors) are factory-equipped with locking levers to ensure plugs and sockets are securely locked. Additional locking levers are only required for flying leads (plug/socket).

Material data

Note (material data)	Information on material specifications can be found here
Color	light green
Insulation material (main housing)	Polyamide (PA66)
Fire class per EN 50575	E_{ca}
Contact material	Copper or copper alloy; surface-treated
Contact Plating	Tin
Fire load	0.307 MJ
Connector color	light green
Strain relief color	black
Sheathed cable color	gray
Printing color of sheathed cable	black
Halogen-free	No
Silicon-free	Yes
Sheath material	PVC
Rubber cable	No
Weight	831 g
Copper weight of the raw cable	0.072 kg/m

Environmental requirements

Processing temperature	-5 … +40 °C
Continuous operating temperature	-35 … +85 °C
Note on continuous operating temperature	Cable for temperatures ≤ 70 °C (including halogen-free) Insulating parts for temperatures ≤ 105 °C

Commercial data

PU (SPU)	1 pcs
Packaging type	unpacked
Country of origin	PL
GTIN	4055143520720
Customs tariff number	85444290900

 Continued on next page

Product Classification

UNSPSC	26121629
eCl@ss 10.0	27-44-06-04
eCl@ss 9.0	27-44-06-04
ETIM 9.0	EC002587
ETIM 10.0	EC002587
ECCN	NO US CLASSIFICATION

Environmental Product Compliance

RoHS Compliance Status	Compliant,No Exemption

Downloads

Environmental Product Compliance

Compliance Search

Environmental Product Compliance
891-8995/206-505

Documentation

Bid Text

891-8995/206-505	19.02.2019	xml 3.00 KB	
891-8995/206-505	12.03.2015	doc 25.50 KB	

CAD/CAE-Data

CAE data

EPLAN Data Portal
891-8995/206-505

1 Compatible Products

1.1 Required Accessories

1.1.1 Locking system

1.1.1.1 Locking system

Item No.: 890-111
Locking lever; for flying leads; for tool operation; black

Item No.: 890-131
Locking lever; for flying leads; for tool operation; white

Item No.: 890-101
Locking lever; for manual operation; black

Item No.: 890-121
Locking lever; for manual operation; white

 Continued on next page

1.2 Optional Accessories

1.2.1 Cover

1.2.1.1 Cover

Item No.: 897-2003
Protective cap; Type2; for sockets and plugs; PVC; red

1.2.2 Installation

1.2.2.1 Mounting accessories

Item No.: 890-310
Mounting carrier; 2- to 5-pole; for flying leads; black

Item No.: 890-311
Mounting carrier; 2- to 5-pole; for flying leads; white