Data Sheet | Item Number: 210-853

Universal push-button border; halogen-free; black

https://www.wago.com/210-853



Color: ■ black

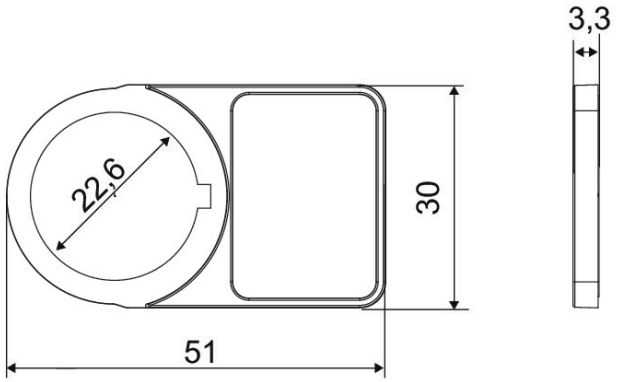

Dimensions in mm

Physical data

Height	19 mm
Width	27 mm

Mechanical data

Mounting type	Pushing in

Material data

Color	black
Material	Polymers
Adhesive information	without adhesive
Halogen-free	Yes
Weight	1.8 g
Fire load	0 MJ

Environmental requirements

Ambient temperature (storage)	+5 … +40 °C
Ambient temperature (operation)	+5 … +100 °C
Relative humidity	40 … 80 %

Continued on next page

Commercial data

Product Group	2 (Terminal Block Accessories)
PU (SPU)	100 pcs
Packaging type	Box
Country of origin	DE
GTIN	4050821674931
Customs tariff number	39269097900

Product Classification

UNSPSC	39121704
eCl@ss 10.0	27-14-40-75
eCl@ss 9.0	27-14-40-75
ETIM 9.0	EC002248
ETIM 10.0	EC002248
ECCN	NO US CLASSIFICATION

Environmental Product Compliance

RoHS Compliance Status	Compliant,No Exemption

Downloads

Environmental Product Compliance

Compliance Search

Environmental Product Compliance 210-853

1 Compatible Products

1.1 Required Accessories

1.1.1 Marking

1.1.1.1 Push-button label



Item No.: 210-852
Push-button marker; 27 x 19 mm; silver-colored