Technical data sheet

Grip ISO clip, single

Item number: 2105039

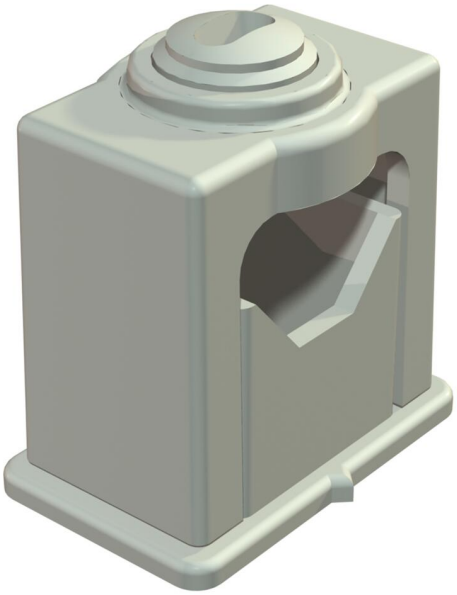

Solid cable fastening through clamping screws, with adhesive base, slot and for screwing to M6 thread.
Use the Impu-Fix ribbon conductor quick adhesive, type 509, to stick the polystyrene clips to masonry and concrete.

HALOGEN FREE CE

PS Polystyrene

Master data

Item number	2105039
Type	3041 LGR
Description 1	Grip ISO clip
Manufacturer	OBO
Dimension	16-24mm
Colour	Light grey; RAL 7035
Material	Polystyrene
Smallest sales unit	50
Unit of quantity	Piece
Weight	1.2 kg
Weight unit	kg/100 pc.
CO2 Footprint (GWP) Cradle-to-Gate	0,0406 kg CO2e / 1 Piece

Technical data sheet

Grip ISO clip, single

Item number: 2105039

Dimensions

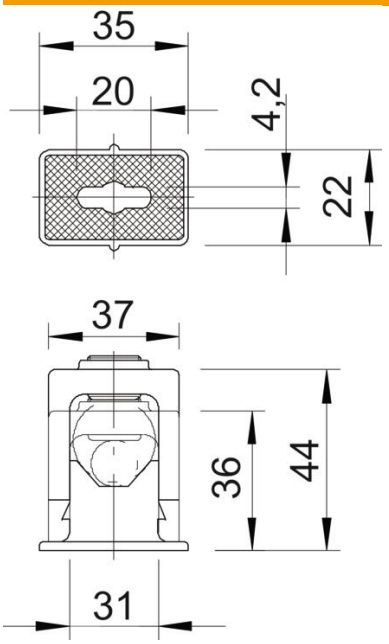

Dimension a	35 mm
Dimension a1 (mm)	20 mm
Dimension b	22 mm
Dimension b1	4.2 mm
Dimension c	37 mm
Dimension d	36 mm
Dimension e	44 mm
Dimension f	31 mm

Technical data

Expandable	no
Number of cables/pipes	1
Fastening type	Screw hole
Halogen-free	yes
Snap system	yes
ROHS-conformant	yes
Impact-resistant	yes
Clamping range D, max.	24 mm
Clamping range D, min.	16 mm