Data Sheet | Item Number: 855-5001/750-000

Split-core current transformer; Primary rated current 750 A; Secondary rated current: 1 A; Rated power: 0.5 VA; Accuracy class: 0.5

https://www.wago.com/855-5001/750-000



Similar to illustration

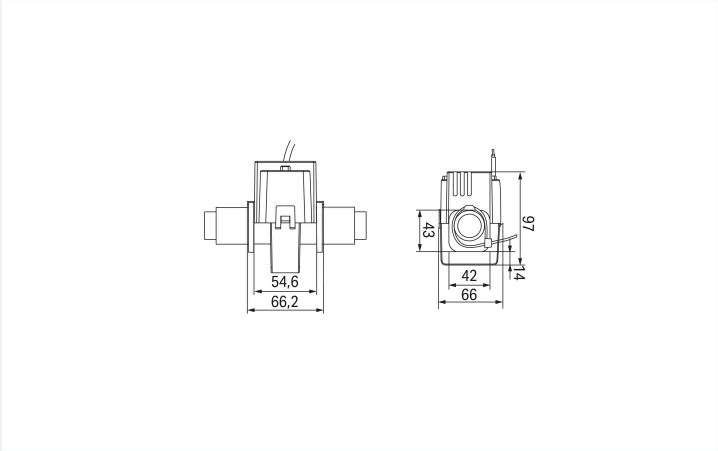

Dimensions in mm

Short description:
WAGO's compact split-core current transformers are ideal for retrofitting existing systems. They are perfect for applications in which the current path must not be disrupted. The transformer's accuracy permits extremely precise current measurements. The split-core current transformers are capable of supplying the specified rated power at the end of the secondary cable. All transformers are supplied with color-coded cables. Two UV-resistant cable ties are also included for secure and easy mounting.

Features:
- Current ratios from 750 A (primary side) and 1 A (secondary side)
- No primary cable interruption
- Ideal for use in very confined spaces
- Rapid mounting
- For use around insulated cables (up to 42 mm Ø)
- Compact and hinged
- Color-coded connection cable (5 m)

Technical data

Input

Measured variable	Current

Input – current transformer

Rated continuous thermal current I_{cth}	100 %
Rated short-time thermal current I_{th}	60 x I_N / 1 s
Rated surge current I_{dyn}	2.5 x I_{th}
Rated frequency	50 … 60 Hz
Primary rated current	750 A

Output – current transformer

Secondary rated current	1 A
Rated power S_r	0.5 VA

Measurement Error

Accuracy class	0.5

Safety and protection

Protection type	IP20
Test voltage	3 kVAC; 50 Hz; 1 min
Highest voltage for equipment U_m	720 V_{rms}AC

Connection Data

Feedthrough for measurement conductor	Ø 42 mm
Cable type	2 x 0.5 mm²; fine-stranded
Color code	brown = S1; blue = S2

Physical data

Cable length	5 m
Width	66.2 mm / 2.606 inches
Height	97 mm / 3.82 inches
Depth	66 mm / 2.6 inches

Mechanical data

Mounting type	Split-core current transformer (suspended)

Material data

Weight	690 g

Environmental requirements

Ambient temperature (operation)	-10 … +55 °C
Ambient temperature (storage)	-20 … +70 °C
Relative humidity	5 … 85 % (without condensation)
Operating altitude (max.)	2000 m

Standards and Specifications

Conformity marking	CE
Standards/specifications	EN 61869-1 EN 61869-2

Commercial data

PU (SPU)	1 pcs
Packaging type	Box
Country of origin	NL
Customs tariff number	85043180888

Continued on next page

Product Classification

UNSPSC	39121006
ETIM 9.0	EC002048
ETIM 10.0	EC002048
ECCN	NO US CLASSIFICATION

Environmental Product Compliance

RoHS Compliance Status	Compliant,No Exemption

Approvals / Certificates

General approvals

Approval	Standard	Certificate Name
EAC GZO Almaty Standart	TP TC 004/2011	EAC CoC 03082

Declarations of conformity and manufacturer's declarations

Approval	Standard	Certificate Name
EU-Declaration of Conformity WAGO GmbH & Co. KG	-	-
UK-Declaration of Conformity WAGO GmbH & Co. KG	-	-

Downloads

Environmental Product Compliance

Compliance Search

Environmental Product Compliance
855-5001/750-000

Documentation

Bid Text

	xml 5.35 KB	
	docx 15.27 KB	

Instruction Leaflet

Kabelumbau-Stromwandler	V 1.1.0 15.01.2020	pdf 812.97 KB	

Engineering-Software

Configuration and Commissioning Software

WAGO Interface Configuration Software SMALL	1.6.3.7 17.09.2019	exe 46878.36 KB	

Continued on next page

1 Compatible Products

1.1 Optional Accessories

1.1.1 Signal conditioner

1.1.1.1 Current Signal Conditioner



Item No.: 857-551
Current signal conditioner; Current input signal; Current and voltage output signal; Digital output; Configuration via software; Supply voltage: 24 VDC; 6 mm module width

Installation Notes

Installation



Simple termination!



Quick and easy mounting!

