Data Sheet | Item Number: 2202-2202

Double-deck terminal block; with push-button; Through/through terminal block; N/L; without marker carrier; suitable for Ex e II applications; Blue conductor entry lower deck; for DIN-rail 35 x 15 and 35 x 7.5; 2.5 mm²; Push-in CAGE CLAMP®; 2,50 mm²; gray

https://www.wago.com/2202-2202

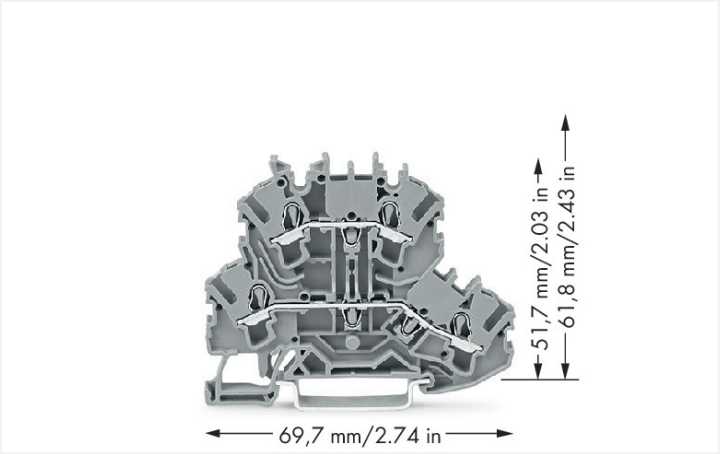

Color: gray

Similar to illustration

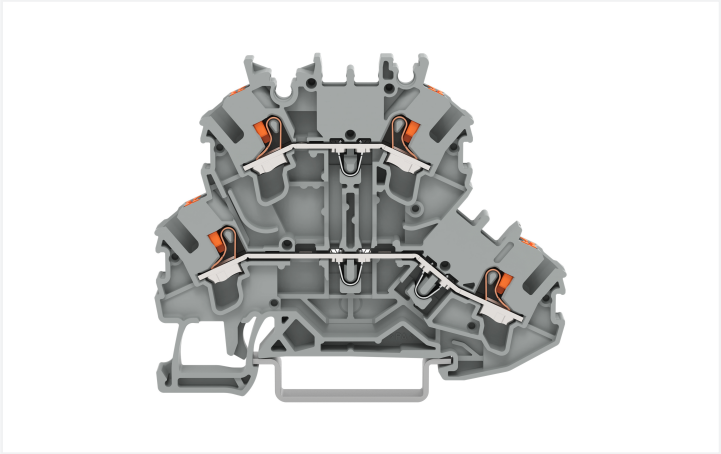

Similar to illustration

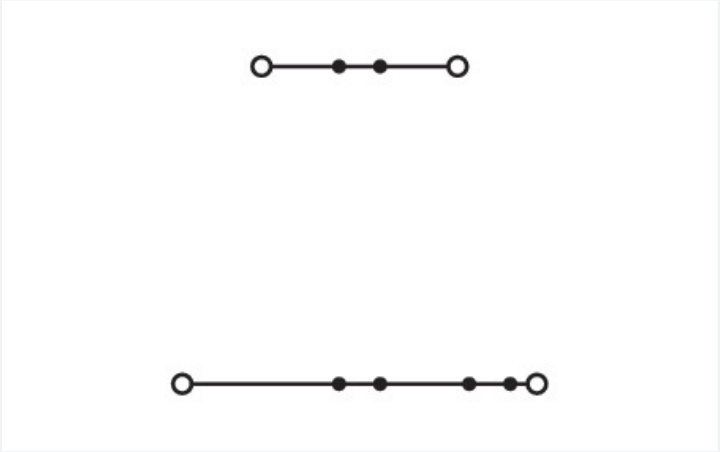

Similar to illustration

Double-deck terminal block, 2202 Series, Push-in CAGE CLAMP®

Our double-deck terminal block (item number 2202-2202) simplifies electrical installations. Ensure that the strip lengths are between 10 and 12 mm when connecting conductors to this double-deck terminal block. The double-deck terminal block also functions as a through terminal block. Featuring conductor terminals along with Push-in CAGE CLAMP®, this product is highly versatile. Push-in CAGE CLAMP® technology provides a universal connection solution for any type of conductor. It allows both solid and fine-stranded conductors with ferrules to be inserted directly into the clamping point without the need for tools. This double-deck terminal block is suitable for conductor cross sections ranging from 0.25 mm² to 4 mm².

This product is designed for specific Ex applications (please refer to the product datasheet).

Electrical data

Ratings per	IEC/EN 60947-7-1		
Overvoltage category	III	III	II
Pollution degree	3	2	2
Nominal voltage	500 V	-	-
Rated impulse withstand voltage	6 kV	-	-
Rated current	23 A	-	-
Current at conductor cross-section (max.) mm²	28 A	-	-

Ex information

Reference to hazardous areas	See “Downloads – Documentation – Additional Information: Technical Section; Technical Explications“

Power Loss

Power loss, per pole (potential)	0.7661 W
Rated current I_N for power loss specification	23 A
Resistance value for specified, current-dependent power loss	0.00133 Ω

General information

Wiring direction	Front-entry wiring

Connection Data

Clamping units	4
Total number of potentials	2
Number of levels	2
Number of jumper slots	4

Connection 1

Connection technology	Push-in CAGE CLAMP®
Number of connection points	2
Actuation type	Push-button
Connectable conductor materials	Copper
Nominal cross-section	2.5 mm²
Solid conductor	0.25 … 4 mm² / 22 … 12 AWG
Solid conductor; push-in termination	1 mm² / 18 AWG
Stranded conductor	0.25 … 4 mm² / 22 … 12 AWG
Fine-stranded conductor	0.25 … 4 mm² / 22 … 12 AWG
Fine-stranded conductor; with insulated ferrule	1 … 2.5 mm² / 18 … 12 AWG
Fine-stranded conductor; with ferrule; push-in termination	1 mm² / 18 AWG
Note (conductor cross-section)	Depending on the conductor characteristic, a conductor with a smaller cross-section can also be inserted via push-in termination.
Strip length	10 … 12 mm / 0.39 … 0.47 inches
Wiring direction	Front-entry wiring

Connection 2

Number of connection points	2

Physical data

Width	5.2 mm / 0.205 inches
Height	69.7 mm / 2.744 inches
Depth from upper-edge of DIN-rail	51.7 mm / 2.035 inches

Continued on next page

Mechanical data

Potential marking	N/L
Mounting type	DIN-35 x 15 rail DIN-35 x 7.5 rail
Marking level	Center/side marking

Material data

Note (material data)	Information on material specifications can be found here
Color	gray
Material group	I
Insulation material (main housing)	Polyamide (PA66)
Flammability class per UL94	V0
Fire load	0.221 MJ
Weight	10.2 g

Environmental requirements

Processing temperature	-35 … +85 °C
Continuous operating temperature	-60 … +105 °C

Commercial data

PU (SPU)	50 pcs
Packaging type	Box
Country of origin	PL
GTIN	4066966426533
Customs tariff number	85369010000

Product Classification

UNSPSC	39121410
ETIM 9.0	EC000897
ETIM 10.0	EC000897
ECCN	NO US CLASSIFICATION

Environmental Product Compliance

RoHS Compliance Status	Compliant,No Exemption

Approvals / Certificates

General approvals

Approval	Standard	Certificate Name
DEKRA DEKRA Certification B.V.	EN 60947	71-147887
UL Underwriters Laboratories Inc.	UL 1059	UL-US-L45172-6187178-11508102-1

Declarations of conformity and manufacturer's declarations

Approval	Standard	Certificate Name
EU-Declaration of Conformity WAGO GmbH & Co. KG	-	-

 Continued on next page

Downloads

Environmental Product Compliance

Compliance Search

Environmental Product Compliance 2202-2202

CAD/CAE-Data

CAD data

2D/3D Models 2202-2202

1 Compatible Products

1.1 Required Accessories

1.1.1 End plate

1.1.1.1 End plate



Item No.: 2002-2291
End and intermediate plate; 0.8 mm thick; gray



Item No.: 2002-2292
End and intermediate plate; 0.8 mm thick; orange



Item No.: 209-192
Separator for Ex e/Ex i applications; 3 mm thick; 125.5 mm wide; orange



Item No.: 2002-2295
Separator plate; oversized upper deck; snap-fit type; 2 mm thick; gray



Item No.: 2002-2296
Separator plate; oversized upper deck; snap-fit type; 2 mm thick; orange

1.2 Optional Accessories

1.2.1 DIN-rail

1.2.1.1 Mounting accessories



Item No.: 210-196
Aluminum carrier rail; 35 x 8.2 mm; 1.6 mm thick; 2 m long; unslotted; similar to EN 60715; silver-colored



Item No.: 210-198
Copper carrier rail; 35 x 15 mm; 2.3 mm thick; 2 m long; unslotted; according to EN 60715; copper-colored



Item No.: 210-508
Steel carrier rail; 35 x 15 mm; 1.5 mm thick; 2 m long; slotted; galvanized; similar to EN 60715; silver-colored



Item No.: 210-197
Steel carrier rail; 35 x 15 mm; 1.5 mm thick; 2 m long; slotted; similar to EN 60715; silver-colored



Item No.: 210-506
Steel carrier rail; 35 x 15 mm; 1.5 mm thick; 2 m long; unslotted; galvanized; similar to EN 60715; silver-colored



Item No.: 210-114
Steel carrier rail; 35 x 15 mm; 1.5 mm thick; 2 m long; unslotted; similar to EN 60715; silver-colored



Item No.: 210-118
Steel carrier rail; 35 x 15 mm; 2.3 mm thick; 2 m long; unslotted; according to EN 60715; silver-colored



Item No.: 210-115
Steel carrier rail; 35 x 7.5 mm; 1 mm thick; 2 m long; slotted; according to EN 60715; "Hole width 18 mm; silver-colored



Item No.: 210-112
Steel carrier rail; 35 x 7.5 mm; 1 mm thick; 2 m long; slotted; according to EN 60715; "Hole width 25 mm; silver-colored



Item No.: 210-504
Steel carrier rail; 35 x 7.5 mm; 1 mm thick; 2 m long; slotted; galvanized; according to EN 60715; silver-colored



Item No.: 210-113
Steel carrier rail; 35 x 7.5 mm; 1 mm thick; 2 m long; unslotted; according to EN 60715; silver-colored



Item No.: 210-505
Steel carrier rail; 35 x 7.5 mm; 1 mm thick; 2 m long; unslotted; galvanized; according to EN 60715; silver-colored

Continued on next page

1.2.2 Ferrule

1.2.2.1 Ferrule

Item No.: 216-241
Ferrule; Sleeve for 0.5 mm² / 20 AWG; insulated; electro-tin plated; electrolytic copper; gastight crimped; acc. to DIN 46228, Part 4/09.90; white

Item No.: 216-242
Ferrule; Sleeve for 0.75 mm² / 18 AWG; insulated; electro-tin plated; electrolytic copper; gastight crimped; acc. to DIN 46228, Part 4/09.90; gray

Item No.: 216-262
Ferrule; Sleeve for 0.75 mm² / 18 AWG; insulated; electro-tin plated; electrolytic copper; gastight crimped; acc. to DIN 46228, Part 4/09.90; gray

Item No.: 216-243
Ferrule; Sleeve for 1 mm² / AWG 18; insulated; electro-tin plated; electrolytic copper; gastight crimped; acc. to DIN 46228, Part 4/09.90; red

Item No.: 216-263
Ferrule; Sleeve for 1 mm² / AWG 18; insulated; electro-tin plated; electrolytic copper; gastight crimped; acc. to DIN 46228, Part 4/09.90; red



Item No.: 216-244
Ferrule; Sleeve for 1.5 mm² / AWG 16; insulated; electro-tin plated; electrolytic copper; gastight crimped; acc. to DIN 46228, Part 4/09.90; black



Item No.: 216-264
Ferrule; Sleeve for 1.5 mm² / AWG 16; insulated; electro-tin plated; electrolytic copper; gastight crimped; acc. to DIN 46228, Part 4/09.90; black



Item No.: 216-246
Ferrule; Sleeve for 2.5 mm² / AWG 14; insulated; electro-tin plated; electrolytic copper; gastight crimped; acc. to DIN 46228, Part 4/09.90; blue



Item No.: 216-266
Ferrule; Sleeve for 2.5 mm² / AWG 14; insulated; electro-tin plated; electrolytic copper; gastight crimped; acc. to DIN 46228, Part 4/09.90; blue

1.2.3 Installation

1.2.3.1 Cover

Item No.: 709-156
Cover; Type 3; suitable for cover carrier, type 3; 1 m long; transparent

1.2.3.2 Cover carrier



Item No.: 709-169
Cover carrier; Type 3; incl. fixing/retaining screws and knurled nut; suitable for 279 to 282 and 880 Series rail-mounted terminal blocks; suitable for 264 Series miniature rail-mounted terminal blocks; suitable for 270 Series sensor and actuator terminal blocks; gray

1.2.4 Insulation stop

1.2.4.1 Insulation stop



Item No.: 2002-171
Insulation stop; 0.25 - 0.5 mm²; 5 pieces/ strip; light gray



Item No.: 2002-172
Insulation stop; 0.75 - 1 mm²; 5 pieces/ strip; dark gray

 Continued on next page

1.2.5 Jumper

1.2.5.1 Jumper



Item No.: 2002-400
Continuous jumper; 2-way; insulated; light gray



Item No.: 2002-413
Continuous jumper; 3-way; insulated; light gray



Item No.: 2002-415
Continuous jumper; 5-way; insulated; light gray



Item No.: 2002-423/000-006
Continuous jumper; from 1 to 3; insulated; blue



Item No.: 2002-423
Continuous jumper; from 1 to 3; insulated; light gray



Item No.: 2002-423/000-005
Continuous jumper; from 1 to 3; insulated; red



Item No.: 2002-424/000-006
Continuous jumper; from 1 to 4; insulated; blue



Item No.: 2002-424
Continuous jumper; from 1 to 4; insulated; light gray



Item No.: 2002-424/000-005
Continuous jumper; from 1 to 4; insulated; red



Item No.: 2002-406/020-000
Delta jumper; insulated; light gray



Item No.: 2002-410/000-006
Jumper; 10-way; insulated; blue



Item No.: 2002-410
Jumper; 10-way; insulated; light gray



Item No.: 2002-410/000-005
Jumper; 10-way; insulated; red



Item No.: 2002-402/000-006
Jumper; 2-way; insulated; blue



Item No.: 2002-402
Jumper; 2-way; insulated; light gray



Item No.: 2002-402/000-005
Jumper; 2-way; insulated; red



Item No.: 2002-403/000-006
Jumper; 3-way; insulated; blue



Item No.: 2002-403
Jumper; 3-way; insulated; light gray



Item No.: 2002-403/000-005
Jumper; 3-way; insulated; red



Item No.: 2002-404/000-006
Jumper; 4-way; insulated; blue



Item No.: 2002-404
Jumper; 4-way; insulated; light gray



Item No.: 2002-404/000-005
Jumper; 4-way; insulated; red



Item No.: 2002-405/000-006
Jumper; 5-way; insulated; blue



Item No.: 2002-405
Jumper; 5-way; insulated; light gray



Item No.: 2002-405/000-005
Jumper; 5-way; insulated; red



Item No.: 2002-406/000-006
Jumper; 6-way; insulated; blue



Item No.: 2002-406
Jumper; 6-way; insulated; light gray



Item No.: 2002-406/000-005
Jumper; 6-way; insulated; red



Item No.: 2002-407/000-006
Jumper; 7-way; insulated; blue



Item No.: 2002-407
Jumper; 7-way; insulated; light gray



Item No.: 2002-407/000-005
Jumper; 7-way; insulated; red



Item No.: 2002-408/000-006
Jumper; 8-way; insulated; blue

Item No.: 2002-408
Jumper; 8-way; insulated; light gray



Item No.: 2002-408/000-005
Jumper; 8-way; insulated; red



Item No.: 2002-409/000-006
Jumper; 9-way; insulated; blue

Item No.: 2002-409
Jumper; 9-way; insulated; light gray



Item No.: 2002-409/000-005
Jumper; 9-way; insulated; red

Item No.: 2002-440
Jumper; from 1 to 10; insulated; light gray

Item No.: 2002-433
Jumper; from 1 to 3; insulated; light gray



Item No.: 2002-434
Jumper; from 1 to 4; insulated; light gray

Item No.: 2002-435
Jumper; from 1 to 5; insulated; light gray

Item No.: 2002-436
Jumper; from 1 to 6; insulated; light gray

Item No.: 2002-437
Jumper; from 1 to 7; insulated; light gray

Item No.: 2002-438
Jumper; from 1 to 8; insulated; light gray

Item No.: 2002-439
Jumper; from 1 to 9; insulated; light gray

Item No.: 2002-480
Staggered jumper; 10-way; insulated; light gray

Item No.: 2002-481
Staggered jumper; 11-way; insulated; light gray

Item No.: 2002-482
Staggered jumper; 12-way; insulated; light gray

Item No.: 2002-473/011-000
Staggered jumper; 2-way; from 1 to 3; insulated; light gray

Item No.: 2002-472
Staggered jumper; 2-way; insulated; light gray

Item No.: 2002-473
Staggered jumper; 3-way; insulated; light gray

Item No.: 2002-475/011-000
Staggered jumper; 3-way; insulated; light gray

Item No.: 2002-474
Staggered jumper; 4-way; insulated; light gray

Item No.: 2002-475
Staggered jumper; 5-way; insulated; light gray

Item No.: 2002-476
Staggered jumper; 6-way; insulated; light gray

Item No.: 2002-477
Staggered jumper; 7-way; insulated; light gray

Continued on next page

1.2.5.1 Jumper



Item No.: 2002-478
Staggered jumper; 8-way; insulated; light gray



Item No.: 2002-479
Staggered jumper; 9-way; insulated; light gray



Item No.: 2002-477/011-000
Staggered jumper; insulated; light gray



Item No.: 2002-479/011-000
Staggered jumper; insulated; light gray



Item No.: 2002-481/011-000
Staggered jumper; insulated; light gray



Item No.: 2002-405/011-000
Star point jumper; 3-way; insulated; light gray

Item No.: 2002-492
Vertical jumper; insulated; light gray

Item No.: 2002-492/000-012
Vertical jumper; insulated; orange



Item No.: 210-103
Wire commoning chain; insulated; black



Item No.: 210-123
Wire commoning chain; insulated; blue

1.2.6 Marking

1.2.6.1 Group marker carrier



Item No.: 2009-191
Group marker carrier; gray



Item No.: 2009-192
Group marker carrier; gray



Item No.: 2009-193
Group marker carrier; gray

1.2.6.2 Marker



Item No.: 2009-145/000-006
Mini-WSB Inline; for Smart Printer; 1700 pieces on roll; stretchable 5 - 5.2 mm; plain; snap-on type; blue



Item No.: 2009-145/000-007
Mini-WSB Inline; for Smart Printer; 1700 pieces on roll; stretchable 5 - 5.2 mm; plain; snap-on type; gray



Item No.: 2009-145/000-023
Mini-WSB Inline; for Smart Printer; 1700 pieces on roll; stretchable 5 - 5.2 mm; plain; snap-on type; green



Item No.: 2009-145/000-012
Mini-WSB Inline; for Smart Printer; 1700 pieces on roll; stretchable 5 - 5.2 mm; plain; snap-on type; orange



Item No.: 2009-145/000-005
Mini-WSB Inline; for Smart Printer; 1700 pieces on roll; stretchable 5 - 5.2 mm; plain; snap-on type; red



Item No.: 2009-145/000-024
Mini-WSB Inline; for Smart Printer; 1700 pieces on roll; stretchable 5 - 5.2 mm; plain; snap-on type; violet



Item No.: 2009-145
Mini-WSB Inline; for Smart Printer; 1700 pieces on roll; stretchable 5 - 5.2 mm; plain; snap-on type; white



Item No.: 2009-145/000-002
Mini-WSB Inline; for Smart Printer; 1700 pieces on roll; stretchable 5 - 5.2 mm; plain; snap-on type; yellow



Item No.: 248-501/000-006
Mini-WSB marking card; as card; not stretchable; plain; snap-on type; blue



Item No.: 248-501/000-007
Mini-WSB marking card; as card; not stretchable; plain; snap-on type; gray



Item No.: 248-501/000-023
Mini-WSB marking card; as card; not stretchable; plain; snap-on type; green



Item No.: 248-501/000-017
Mini-WSB marking card; as card; not stretchable; plain; snap-on type; light green



Item No.: 248-501/000-012
Mini-WSB marking card; as card; not stretchable; plain; snap-on type; orange



Item No.: 248-501/000-005
Mini-WSB marking card; as card; not stretchable; plain; snap-on type; red



Item No.: 248-501/000-024
Mini-WSB marking card; as card; not stretchable; plain; snap-on type; violet



Item No.: 248-501
Mini-WSB marking card; as card; not stretchable; plain; snap-on type; white



Item No.: 248-501/000-002
Mini-WSB marking card; as card; not stretchable; plain; snap-on type; yellow



Item No.: 793-5501/000-006
WMB marking card; as card; for terminal block width 5 - 17.5 mm; stretchable 5 - 5.2 mm; plain; snap-on type; blue



Item No.: 793-5501/000-014
WMB marking card; as card; for terminal block width 5 - 17.5 mm; stretchable 5 - 5.2 mm; plain; snap-on type; brown



Item No.: 793-5501/000-007
WMB marking card; as card; for terminal block width 5 - 17.5 mm; stretchable 5 - 5.2 mm; plain; snap-on type; gray



Item No.: 793-5501/000-023
WMB marking card; as card; for terminal block width 5 - 17.5 mm; stretchable 5 - 5.2 mm; plain; snap-on type; green



Item No.: 793-5501/000-017
WMB marking card; as card; for terminal block width 5 - 17.5 mm; stretchable 5 - 5.2 mm; plain; snap-on type; light green



Item No.: 793-5501/000-012
WMB marking card; as card; for terminal block width 5 - 17.5 mm; stretchable 5 - 5.2 mm; plain; snap-on type; orange



Item No.: 793-5501/000-005
WMB marking card; as card; for terminal block width 5 - 17.5 mm; stretchable 5 - 5.2 mm; plain; snap-on type; red



Item No.: 793-5501/000-024
WMB marking card; as card; for terminal block width 5 - 17.5 mm; stretchable 5 - 5.2 mm; plain; snap-on type; violet

Item No.: 793-5501
WMB marking card; as card; for terminal block width 5 - 17.5 mm; stretchable 5 - 5.2 mm; plain; snap-on type; white



Item No.: 793-5501/000-002
WMB marking card; as card; for terminal block width 5 - 17.5 mm; stretchable 5 - 5.2 mm; plain; snap-on type; yellow

Item No.: 2009-115/000-006
WMB-Inline; for Smart Printer; 1500 pieces on roll; stretchable 5 - 5.2 mm; plain; snap-on type; blue

Continued on next page

1.2.6.2 Marker



Item No.: 2009-115/000-007
WMB-Inline; for Smart Printer; 1500 pieces on roll; stretchable 5 - 5.2 mm; plain; snap-on type; gray



Item No.: 2009-115/000-023
WMB-Inline; for Smart Printer; 1500 pieces on roll; stretchable 5 - 5.2 mm; plain; snap-on type; green



Item No.: 2009-115/000-017
WMB-Inline; for Smart Printer; 1500 pieces on roll; stretchable 5 - 5.2 mm; plain; snap-on type; light green



Item No.: 2009-115/000-012
WMB-Inline; for Smart Printer; 1500 pieces on roll; stretchable 5 - 5.2 mm; plain; snap-on type; orange



Item No.: 2009-115/000-005
WMB-Inline; for Smart Printer; 1500 pieces on roll; stretchable 5 - 5.2 mm; plain; snap-on type; red



Item No.: 2009-115/000-024
WMB-Inline; for Smart Printer; 1500 pieces on roll; stretchable 5 - 5.2 mm; plain; snap-on type; violet



Item No.: 2009-115
WMB-Inline; for Smart Printer; 1500 pieces on roll; stretchable 5 - 5.2 mm; plain; snap-on type; white



Item No.: 2009-115/000-002
WMB-Inline; for Smart Printer; 1500 pieces on roll; stretchable 5 - 5.2 mm; plain; snap-on type; yellow

1.2.6.3 Marker carrier



Item No.: 2002-121
Adaptor; gray



Item No.: 2002-161
Adaptor; gray



Item No.: 2009-198
Adaptor; gray

1.2.6.4 Marking strip



Item No.: 2009-110
Marking strips; for Smart Printer; on reel; not stretchable; plain; snap-on type; white

1.2.7 Protective warning marker

1.2.7.1 Cover



Item No.: 2002-115
Protective warning marker; for 5 terminal blocks; with high-voltage symbol, black; yellow

1.2.8 Push-in type wire jumper

1.2.8.1 Jumper



Item No.: 2009-414
Push-in type wire jumper; 1.5 mm²; insulated; 110 mm long; black



Item No.: 2009-414/000-005
Push-in type wire jumper; 1.5 mm²; insulated; 110 mm long; black



Item No.: 2009-416
Push-in type wire jumper; 1.5 mm²; insulated; 250 mm long; black



Item No.: 2009-414/000-006
Push-in type wire jumper; insulated; 110 mm long; black



Item No.: 2009-412
Push-in type wire jumper; insulated; 60 mm long; black

 Continued on next page

1.2.9 Screwless end stop

1.2.9.1 Mounting accessories



Item No.: 249-117
Screwless end stop; 10 mm wide; for DIN-rail 35 x 15 and 35 x 7.5; gray



Item No.: 249-116
Screwless end stop; 6 mm wide; for DIN-rail 35 x 15 and 35 x 7.5; gray

1.2.10 Test and measurement

1.2.10.1 Testing accessories

Item No.: 2009-174
Test plug adapter; for 4 mm Ø test plugs; for testing TOPJOB®S rail-mounted terminal blocks; gray



Item No.: 2009-182
Testing tap; for max. 2.5 mm²; tool-free connection for individual test wires 0.08 - 2.5 mm; gray



Item No.: 2002-649
TOPJOB®S L-type spacer module; modular; e.g., for bridging commoned terminal blocks; gray



Item No.: 2002-611
TOPJOB®S L-type test plug module; modular; 1-pole; gray

1.2.11 Tool

1.2.11.1 Operating tool



Item No.: 210-658
Operating tool; Blade: 3.5 x 0.5 mm; with a partially insulated shaft; angled; short; multicoloured



Item No.: 210-720
Operating tool; Blade: 3.5 x 0.5 mm; with a partially insulated shaft; multicoloured