Product Data Sheet

DX40140

GW FIT-serie

Routingonderdelen voor rigide beschermende buizen met beschermingsgraad IP40 en IP67.

Kleur	Grijs RAL 7035	IP waarde	IP40
Buizen Ø (mm)	40	Type materiaal	Halogeenvrij conform EN 50642
Electrocod	21221		

DIMENSIONAL

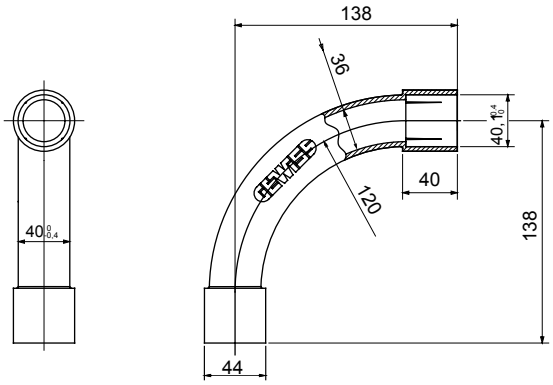

TECHNICAL SYMBOLOGY

IP

HF HALOGEN FREE

IP40

STANDARDS/APPROVALS

GEWISS S.p.A. Via Domenico Bosatelli 1
24069 Cenate Sotto - Bergamo - Italy
tel. +39 035 94 61 11 fax +39 035 94 69 09

www.gewiss.com
sat@gewiss.com
Last update 10/03/2026

Data, measures, designs and pictures are shown only as informative purposes, and could be changed without previous notice