Technical data sheet

Series pressure clip 2037

Item number: 2250527



Universal clip for the single fastening of cables and pipes, all sizes can be seamlessly expanded among each other, with adhesive foot, slot and for screwing onto an M6 thread.
*Sizes 3–7 are not suitable for nail guns.

HALOGEN FREE CE

PA Polyamide

Master data

Item number	2250527
Type	2037 12-20 SW
Description 1	Series pressure clip
Manufacturer	OBO
Dimension	12-20mm
Colour	Black
Material	Polyamide
Smallest sales unit	50
Unit of quantity	Piece
Weight	0.571 kg
Weight unit	kg/100 pc.
CO2 Footprint (GWP) Cradle-to-Gate	0,0259 kg CO2e / 1 Piece

Technical data sheet

Series pressure clip 2037

Item number: 2250527

Dimensions

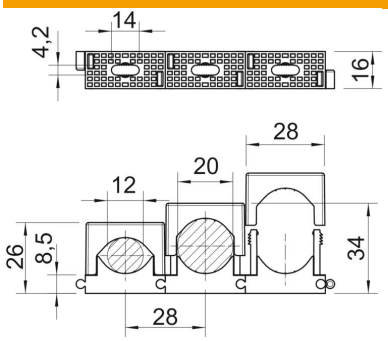

Dimension A	28 mm
Dimension d max.	20 mm
Dimension d min.	12 mm
Dimension F	14 mm
Dimension H1	8.5 mm
Dimension H2	26 mm
Dimension H3	34 mm

Technical data

Expandable	yes
Number of cables/pipes	1
Fastening type	Screw hole
Halogen-free	yes
Snap system	yes
ROHS-conformant	yes
Impact-resistant	no
Clamping range D, max.	20 mm
Clamping range D, min.	12 mm