Data Sheet | Item Number: 855-4201/200-101

Split-core current transformer; Primary rated current: 200 A; Secondary rated current: 1 A; Accuracy class: 1; Secondary connection with lever

https://www.wago.com/855-4201/200-101





Similar to illustration











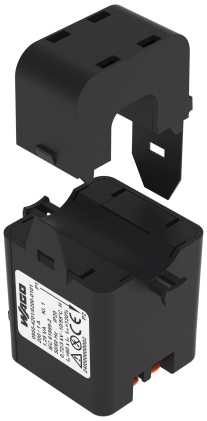

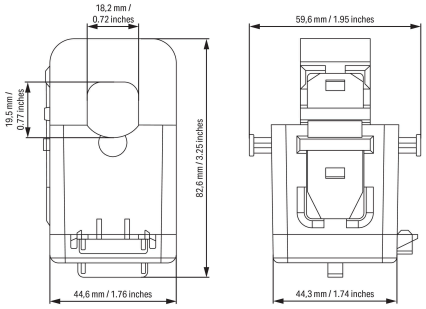

Short description:
The new split-core current transformers feature robust housings made from flame-retardant polyamide. The click-off hinge allows for complete removal of the top part, making installation easier even in difficult and tight spaces. Thanks to the integrated WAGO 221 Series Inline Splicing Connector with Levers, the new transformers are suitable for direct, tool-free connection of both solid and fine-stranded conductors and offer additional time savings. The integrated short-circuit bridge, which can be plugged into two positions (short-circuit position and storage position), ensures safe installation, commissioning and maintenance. The user can configure the connection cable themselves, allowing them to individually select the cross-section, length and other specifications. The new series covers primary rated currents from a maximum of 60 to 250 A and is also available with 1 A, 5 A and a transformation ratio of 333 mV. A sophisticated spring system ensures constant contact pressure on the core halves, providing years of consistent and accurate measurements.

Technical data

Input

Measured variable	Current

Input – current transformer

Rated continuous thermal current I_{cth}	100 %
Rated short-time thermal current I_{th}	60 x I_N / 1 s
Rated surge current I_{dyn}	2.5 x I_{th}
Rated frequency	50 … 60 Hz
Primary rated current	200 A

Output – current transformer

Secondary rated current	1 A
Rated power S_r	1.4 VA

Measurement Error

Accuracy class	1

 Continued on next page

Safety and protection

Protection type	IP20
Test voltage	6 kVAC; 50 Hz; 1 min
Highest voltage for equipment U_m	720 V_{rms}AC

Connection Data

Feedthrough for measurement conductor	Ø 18 mm

Connection 2

Connection type	Secondary
Connection technology	CAGE CLAMP®
WAGO connector	WAGO 221-2411
Actuation type	Lever
Strip length	11 mm / 0.43 inches
Solid conductor	0.2 … 4 mm² / 20 … 14 AWG
Fine-stranded conductor	0.2 … 4 mm² / 18 … 14 AWG

Physical data

Width	59.6 mm / 1.95 inches
Height	82.6 mm / 3.25 inches
Depth	44.6 mm / 1.76 inches

Mechanical data

Mounting type	Split-core current transformer (suspended)

Material data

Weight	285 g

Environmental requirements

Ambient temperature (operation)	-10 … +55 °C
Ambient temperature (storage)	-20 … +70 °C
Relative humidity	5 … 85 % (without condensation)
Operating altitude (max.)	2000 m

Standards and Specifications

Conformity marking	CE
Standards/specifications	EN 61869-1 EN 61869-2

Commercial data

PU (SPU)	1 pcs
Packaging type	Box
Country of origin	CZ
Customs tariff number	85043129900

Continued on next page

Product Classification

UNSPSC	39121006
ETIM 9.0	EC002048
ETIM 10.0	EC002048
ECCN	NO US CLASSIFICATION

Environmental Product Compliance

RoHS Compliance Status	Compliant,No Exemption

Approvals / Certificates

Declarations of conformity and manufacturer's declarations

Approval	Standard	Certificate Name
EU-Declaration of Conformity WAGO GmbH & Co. KG	-	-

Downloads

Environmental Product Compliance

Compliance Search

Environmental Product Compliance
855-4201/200-101

Engineering-Software

Configuration and Commissioning Software

WAGO Interface Configuration Software SMALL	1.6.3.7 17.09.2019	exe 46878.36 KB	

1 Compatible Products

1.1 Optional Accessories

1.1.1 Communication

1.1.1.1 Communication Module



Item No.: 879-9000
Communication module; Modbus TCP

 Continued on next page

1.1.2 General accessories

1.1.2.1 Energy Meter



Item No.: 879-3040
Energy meter (MID26); for transformer connection; 1 A / 5 A; 3x230/400V; 50Hz; Modbus® and M-Bus; 2 x S0 interface; 2PU CT

1.1.3 Installation

1.1.3.1 Current transformer terminal block



Item No.: 2007-8876
Compact terminal block; for 3-phase current transformer circuit; 6,00 mm²; multicoloured



Item No.: 2007-8873
Compact terminal block; for current and voltage transformers; 6,00 mm²; multicoloured



Item No.: 2007-8874
Compact terminal block; for current and voltage transformers; 6,00 mm²; multicoloured



Item No.: 2007-8875
Compact terminal block; for current transformer circuit; 6,00 mm²; multicoloured



Item No.: 2007-8877
Compact terminal block; for current transformer circuit; 6,00 mm²; multicoloured

1.1.4 Signal conditioner

1.1.4.1 Current Signal Conditioner



Item No.: 857-551
Current signal conditioner; Current input signal; Current and voltage output signal; Digital output; Configuration via software; Supply voltage: 24 VDC; 6 mm module width



Item No.: 857-550
Current signal conditioner; Current input signal; Current and voltage output signal; Digital output; Configuration via software; Supply voltage: 24 VDC; 6 mm module width; 2,50 mm²

1.1.4.2 Power Measurement Module



Item No.: 2857-570/024-001
3-Phase Power Measurement Module; 3x277/480 V/1 A; Modbus RTU; Digital output; Configuration via software; Supply voltage: 24 VDC

Installation Notes

Installation



Simple termination!



Quick and easy mounting!

