TECHNICAL PRODUCT DATA SHEET

Masking frame Cepex

Part number: 41407

MENNEKES

Elektrotechnik GmbH & Co. KG
Aloys-Mennekes-Straße 1
57399 KIRCHHUNDEM GERMANY
www.**MENNEKES**.org

Product Description

- single
- matching all Cepex panel mounted receptacles 16A and 32A
- for the installation of single appliances and for vertical combination of any number of receptacles

Technical Details

Masking frame - Cepex	41407
Product serie	Cepex
Weight (ne)	20 g
Packaging unit	25 pcs
Quantity per pallet	5.200 pcs
EAN / identification number	4015394048206

Material properties	
Masking frame	PC/PET light grey [similar 7035]

Material resistance
The material resistance overview can be found on the website in the section “Knowledge” - “Product knowledge” - “Materials”

Material and environmental properties	
RoHS 2011/65/EU incl. 2015/863/EU	✓
POP regulation (EU) 2019/1021	✓

Regulations and Standards	
Declaration of Conformity	CE

Dimensional Drawing

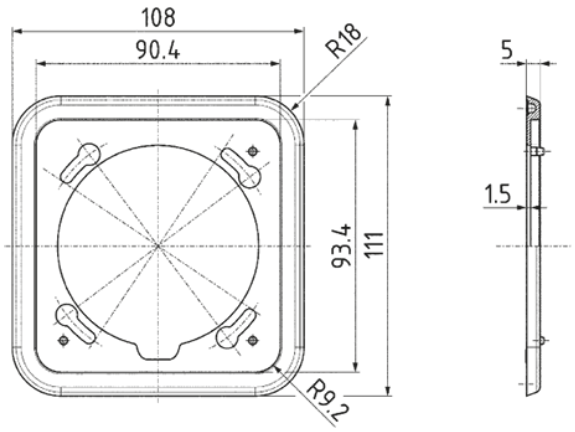

Drawing
1 MB 363

Dim. in mm