TECHNICAL PRODUCT DATA SHEET

Masking frame Cepex

Part number: 41424

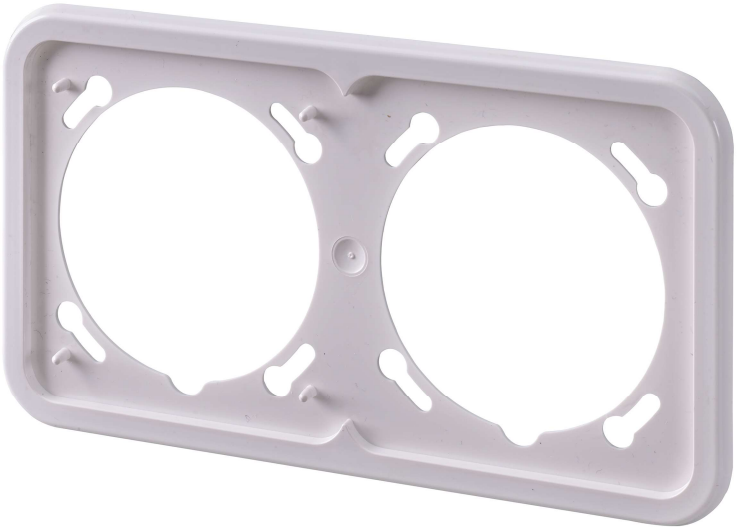

MENNEKES

Elektrotechnik GmbH & Co. KG
Aloys-Mennekes-Straße 1
57399 KIRCHHUNDEM GERMANY
www.**MENNEKES**.org

Product Description

- double
- matching all Cepex panel mounted receptacles 16A and 32A
- for the installation of single appliances and for vertical combination of any number of receptacles

Technical Details

Masking frame - Cepex	41424
Product serie	Cepex
Weight (ne)	30 g
Packaging unit	25 pcs
Quantity per pallet	3.800 pcs
EAN / identification number	4015394048374

Material properties	
Masking frame	PC pure white [similar 9010]

Material resistance
The material resistance overview can be found on the website in the section “Knowledge” - “Product knowledge” - “Materials”

Material and environmental properties	
RoHS 2011/65/EU incl. 2015/863/EU	✓
POP regulation (EU) 2019/1021	✓

Regulations and Standards	
Declaration of Conformity	CE

Dimensional Drawing

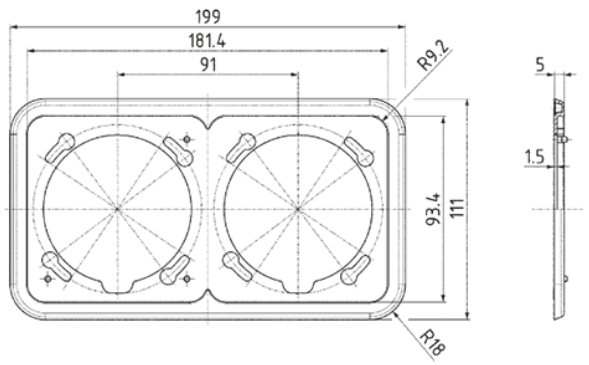

Drawing
1 MB 364

Dim. in mm