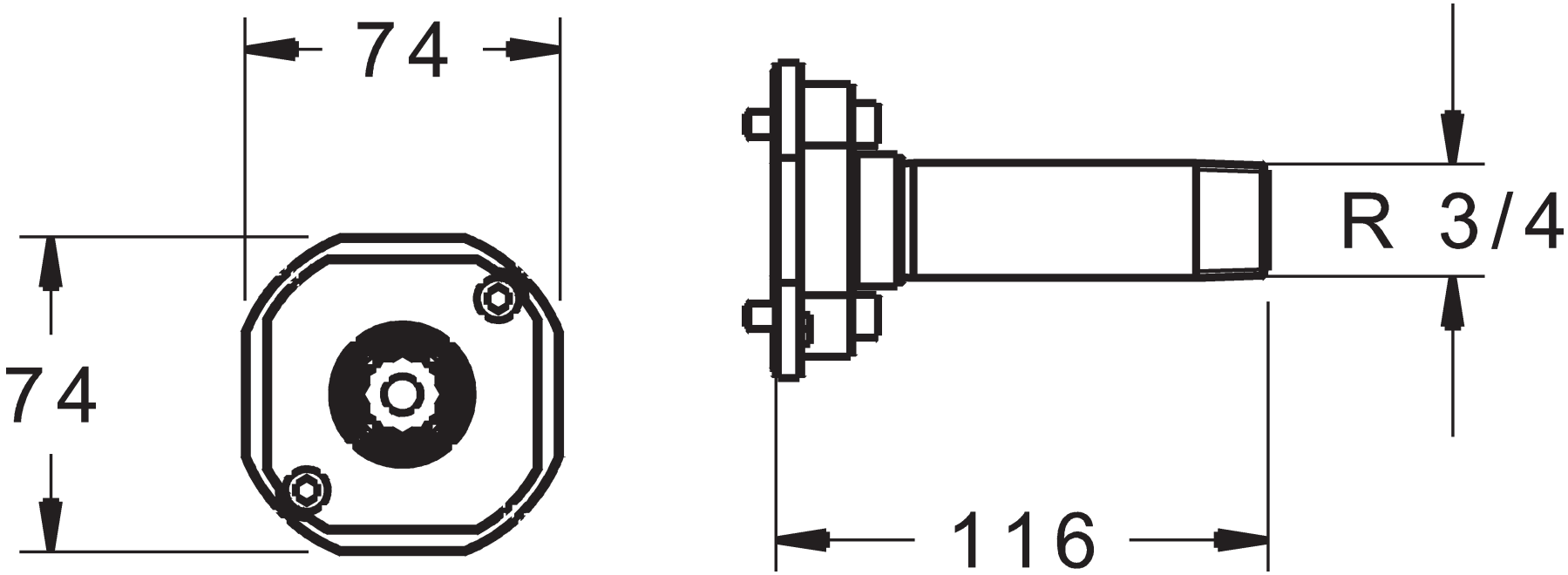
74
74
R 3/4
116