Data Sheet | Item Number: 2092-1525/002-000

1-conductor male connector; Push-in CAGE CLAMP®; 2.5 mm²; Pin spacing 5 mm; 5-pole; Integrated release lever; 2,50 mm²; light gray

https://www.wago.com/2092-1525/002-000

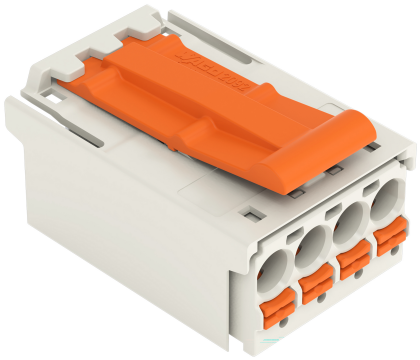

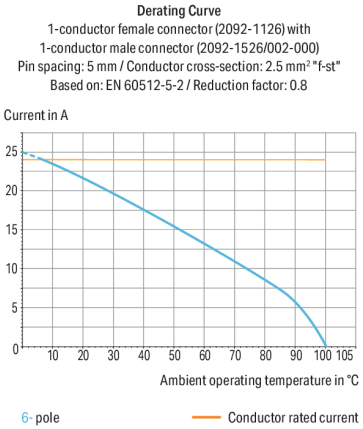

Color: light gray

Similar to illustration

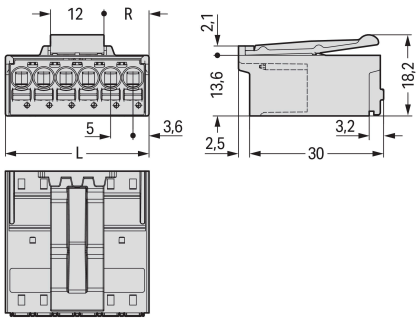

Dimensions in mm
L = (pole no. x pin spacing) + 2.2 mmEven pole number R = (L – 12 mm) : 2Odd pole number R = (L – 17 mm) : 2

Male connector, 2092 Series, push-button

Our male connector (item number 2092-1525/002-000) is designed for seamless electrical installations. Strip lengths must be between 9 and 10 mm when connecting conductors to this male connector. This product features one conductor terminal and utilizes Push-in CAGE CLAMP®. Our Push-in CAGE CLAMP® is a universal, maintenance-free connection solution for all conductor types, boasting a key feature: both solid and fine-stranded conductors with ferrules can be directly inserted without the need for tools or any preparation, such as crimping the ferrule. The item's dimensions are (27.2 x 18.2 x 32.6) mm (width x height x depth). This male connector is suitable for conductor cross sections ranging from 0.2 mm² to 2.5 mm².

The contact surface is coated with tin.

Notes

Safety Information	The **picoMAX® Pluggable Connection System** includes connectors without breaking capacity in accordance with DIN EN 61984. When used as intended, these connectors must not be connected/disconnected when live or under load.When used as intended, these connectors must not be connected/disconnected when live or under load. The circuit design should ensure header pins, which can be touched, are not live when un-mated.
Safety information 2	The use of ferrules is recommended for applications with higher requirements. To prevent excessive force on the clamping point, effective cable strain relief must be used.
Variants:	Direct marking Other versions (or variants) can be requested from WAGO Sales or configured at https://configurator.wago.com/.

Electrical data

Ratings per	IEC/EN 60664-1		
Overvoltage category	III	III	II
Pollution degree	3	2	2
Nominal voltage	250 V	320 V	630 V
Rated impulse withstand voltage	4 kV	4 kV	4 kV
Rated current	16 A	16 A	16 A

Approvals per	UL 1059		
Use group	B	C	D
Rated voltage	300 V	-	300 V
Rated current	15 A	-	10 A

Connection Data

Clamping units	5
Total number of potentials	5
Number of connection types	1
Number of levels	1

Connection 1

Connection technology	Push-in CAGE CLAMP®
Actuation type	Push-button
Actuation direction 1	Operation parallel to conductor entry
Solid conductor	0.2 … 2.5 mm² / 24 … 12 AWG
Fine-stranded conductor	0.2 … 2.5 mm² / 24 … 12 AWG
Fine-stranded conductor; with insulated ferrule	0.25 … 1.5 mm²
Fine-stranded conductor; with uninsulated ferrule	0.25 … 2.5 mm²
Strip length	9 … 10 mm / 0.35 … 0.39 inches
Pole number	5

Physical data

Pin spacing	5 mm / 0.197 inches
Width	27.2 mm / 1.071 inches
Height	18.2 mm / 0.717 inches
Depth	32.6 mm / 1.283 inches

Mechanical data

Variable coding	Yes
Anti-rotation protection	Yes

Continued on next page

Plug-in connection

Contact type (pluggable connector)	Male connector/plug
Connector (connection type)	for conductor
Mismating protection	No
Plugging without loss of pin spacing	Yes
Locking of plug-in connection	Locking latch

Material data

Note (material data)	Information on material specifications can be found here
Color	light gray
Material group	I
Insulation material (main housing)	Polyphthalamide (PPA GF)
Flammability class per UL94	V0
Clamping spring material	Chrome-nickel spring steel (CrNi)
Contact material	Electrolytic copper (E_{Cu})
Contact Plating	Tin
Fire load	0.122 MJ
Weight	10.1 g

Environmental requirements

Limit temperature range	-60 … +100 °C
Processing temperature	-35 … +60 °C

Commercial data

Product Group	26 (picoMAX Connectors)
PU (SPU)	100 pcs
Packaging type	Box
Country of origin	DE
GTIN	4050821164234
Customs tariff number	85366930000

Product Classification

UNSPSC	39121409
eCl@ss 10.0	27-14-11-06
eCl@ss 9.0	27-14-11-06
ETIM 9.0	EC001284
ETIM 10.0	EC001284
ECCN	NO US CLASSIFICATION

Environmental Product Compliance

RoHS Compliance Status	Compliant,No Exemption

 Continued on next page

Approvals / Certificates

General approvals



Approval	Standard	Certificate Name
CB DEKRA Certification B.V.	IEC 61984	NL-89885
CSA CSA Group	C22.2	2362521
CSA DEKRA Certification B.V.	C22.2 No. 158	2362521
cURus Underwriters Laboratories Inc.	UL 1059	E45172
KEMA/KEUR DEKRA Certification B.V.	EN 61984	71-129874
UL Underwriters Laboratories Inc.	UL 1977	E45171

Downloads

Environmental Product Compliance

Compliance Search

Environmental Product Compliance
2092-1525/002-000

Documentation

Additional Information

Technical Section	03.04.2019	pdf 2027.26 KB

CAD/CAE-Data

CAD data

2D/3D Models
2092-1525/002-000

CAE data

ZUKEN Portal
2092-1525/002-000

1 Compatible Products

1.1 System counterpart

1.1.1 Female connector/socket



Item No.: 2092-1125
1-conductor female connector; push-button; Push-in CAGE CLAMP®; 2.5 mm²; Pin spacing 5 mm; 5-pole; 2,50 mm²; light gray



Item No.: 2092-1125/000-1000
1-conductor female connector; push-button; Push-in CAGE CLAMP®; 2.5 mm²; Pin spacing 5 mm; 5-pole; direct marking; 2,50 mm²; light gray



Item No.: 2092-1125/000-5000
1-conductor female connector; push-button; Push-in CAGE CLAMP®; 2.5 mm²; Pin spacing 5 mm; 5-pole; direct marking; 2,50 mm²; light gray



Item No.: 2092-1105
1-conductor female connector; push-button; Push-in CAGE CLAMP®; 2.5 mm²; Pin spacing 5 mm; 5-pole; Gripping plate; 2,50 mm²; light gray



Item No.: 2092-1105/000-1000
1-conductor female connector; push-button; Push-in CAGE CLAMP®; 2.5 mm²; Pin spacing 5 mm; 5-pole; Gripping plate; direct marking; 2,50 mm²; light gray



Item No.: 2092-1105/000-5000
1-conductor female connector; push-button; Push-in CAGE CLAMP®; 2.5 mm²; Pin spacing 5 mm; 5-pole; Gripping plate; direct marking; 2,50 mm²; light gray



Item No.: 2092-1325/200-000
THR female header; angled; Pin spacing 5 mm; 5-pole; 0.4 x 1.3 mm solder pin; light gray



Item No.: 2092-1305/200-000
THR female header; straight; Pin spacing 5 mm; 5-pole; 0.4 x 1.3 mm solder pin; light gray



Item No.: 2092-1325
THT female header; angled; Pin spacing 5 mm; 5-pole; 0.4 x 1.3 mm solder pin; light gray



Item No.: 2092-1305
THT female header; straight; Pin spacing 5 mm; 5-pole; 0.4 x 1.3 mm solder pin; light gray

1.2 Optional Accessories

1.2.1 Ferrule

1.2.1.1 Ferrule

Item No.: 216-301
Ferrule; Sleeve for 0.25 mm² / AWG 24; insulated; electro-tin plated; yellow

Item No.: 216-131
Ferrule; Sleeve for 0.25 mm² / AWG 24; uninsulated; electro-tin plated; silver-colored

Item No.: 216-302
Ferrule; Sleeve for 0.34 mm² / 22 AWG; insulated; electro-tin plated; light turquoise

Item No.: 216-132
Ferrule; Sleeve for 0.34 mm² / AWG 24; uninsulated; electro-tin plated

Item No.: 216-101
Ferrule; Sleeve for 0.5 mm² / AWG 22; uninsulated; electro-tin plated; silver-colored

Item No.: 216-202
Ferrule; Sleeve for 0.75 mm² / 18 AWG; insulated; electro-tin plated; gray



Item No.: 216-102
Ferrule; Sleeve for 0.75 mm² / AWG 20; uninsulated; electro-tin plated; silver-colored



Item No.: 216-122
Ferrule; Sleeve for 0.75 mm² / AWG 20; uninsulated; electro-tin plated; silver-colored

Item No.: 216-203
Ferrule; Sleeve for 1 mm² / AWG 18; insulated; electro-tin plated; red



Item No.: 216-103
Ferrule; Sleeve for 1 mm² / AWG 18; uninsulated; electro-tin plated

Item No.: 216-143
Ferrule; Sleeve for 1 mm² / AWG 18; uninsulated; electro-tin plated; electrolytic copper; gastight crimped; acc. to DIN 46228, Part 1/08.92



Item No.: 216-204
Ferrule; Sleeve for 1.5 mm² / AWG 16; insulated; electro-tin plated; black

Item No.: 216-144
Ferrule; Sleeve for 1.5 mm² / AWG 16; uninsulated; electro-tin plated; electrolytic copper; gastight crimped; acc. to DIN 46228, Part 1/08.92; silver-colored



Item No.: 216-104
Ferrule; Sleeve for 1.5 mm² / AWG 16; uninsulated; electro-tin plated; silver-colored



Item No.: 216-106
Ferrule; Sleeve for 2.5 mm² / AWG 14; uninsulated; electro-tin plated; silver-colored

 Continued on next page

1.2.2 Test and measurement

1.2.2.1 Testing accessories



Item No.: 735-500
WAGO Test pin; 1 mm Ø; 30 V AC / 60 V DC; CAT0; 1 A; 6 mm uninsulated; Test lead for soldering up to 0,5mm²

1.2.3 Tool

1.2.3.1 Operating tool



Item No.: 210-719
Operating tool; Blade: 2.5 x 0.4 mm; with a partially insulated shaft