Data Sheet | Item Number: 771-9993/007-301

pre-assembled interconnecting cable; Eca; Socket/plug; 3-pole; Cod. A; H05VV-F 3G 2.5 mm²; 3 m; 2,50 mm²; black

https://www.wago.com/771-9993/007-301

Color: ■ black

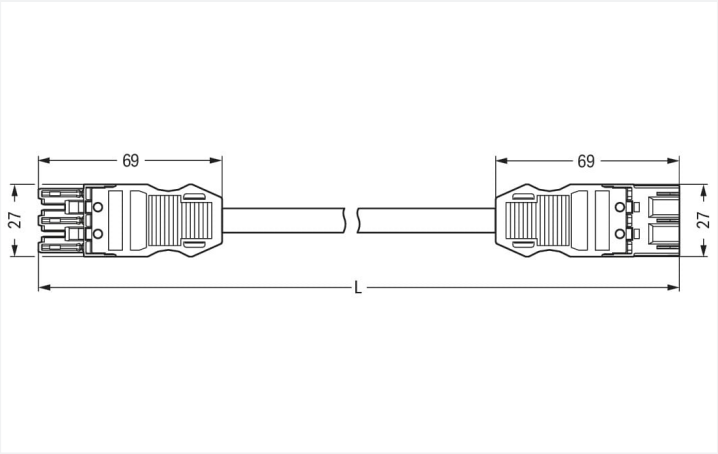

Dimensions in mm

Cable assembly *WINSTA*® MIDI 3-pole

The *WINSTA*® MIDI cable assembly with protection against mismating supports fast, reliable installation. Whether on PCBs, in control cabinets or for connecting lights – pluggable installation connectors from WAGO allow you to make connections according to various requirements in next to no time. The coding options reduce installation errors, allowing fast, secure wiring of all components. The pluggable installation connector is protected in accordance with protection type IP20 (When mated: IP2xC (These compact connectors are not designed for use in open, easily accessible areas!)). This means that users' fingers will never come into contact with live contact elements. Thanks to the color coding and mechanical A coding of *WINSTA*® MIDI pluggable installation connectors, you can clearly distinguish different circuits. This pluggable installation connector is designed for a voltage load of up to 20 A. Thus, it can also be used for high power loads. The *WINSTA*® MIDI product line offers maximum flexibility for the installation. With its Push-in CAGE CLAMP® spring pressure connection technology, it ensures time-saving, error-free installation and offers customization for meeting various installation requirements. According to the European CPR, the fire class of the cables used for construction is decisive for building safety as well. For buildings with average safety requirements, cable assemblies with fire class E are suitable.

Fast, error-free assembly thanks to cable assemblies from WAGO

A socket and a plug are provided. The WINSTA® Pluggable Connection System allows pluggable electrical installation. This significantly reduces the need for servicing and lowers costs. Now you can also cut installation expenses without compromising quality and safety: with protection type IP20 eliminates the need for servicing and prevents unnecessary downtime.

- protection against mismating eliminates errors
- pre-assembled versions
- suitable for any application
- flexible installation to save space
- fast, secure installation

Notes

Note	Cables with a different fire class can be found in the eShop.

Electrical data

Ratings per	IEC/EN 60664-1		
Overvoltage category	III	III	II
Pollution degree	3	2	2
Nominal voltage	250 V	-	-
Rated surge voltage	4 kV	-	-
Rated current	20 A	-	-

General information	
Note on contact resistance	approx. 1 mΩ of contact resistance approx. 0.25 mΩ contact transition plug/socket

 Continued on next page

Connection data

Total number of potentials	3
PE function	Preceding PE contact

Connection 1

Pole number	3
Wire cross-section	2.5 mm²
Connection type	Socket - Plug

Physical data

Pin spacing	10 mm / 0.394 inches
Width	27 mm / 1.063 inches
Height	12.9 mm / 0.508 inches
Total length	3 m

Mechanical data

Use	General mains applications
Coding	A
Variable coding	Yes
Marking	L ⏚ N
Potential marking	L ⏚ N
Mating force of a plug-in connection	approx. 20 … 70 N (depending on pole number)
Retention force of a plug-in connection	when locked: > 80N
Unmating force of a plug-in connection	when unlocked: approx. 20 … 70 N (depending on pole number)
Number of mating cycles	200, without resistive load
Connection type	Socket - Plug
Type of pre-assembled cable	Interconnecting cable
Cable type	H05VV-F 3G2.5
Protection type	IP20; When mated: IP2xC (These compact connectors are not designed for use in open, easily accessible areas!)

Plug-in connection

Mismating protection	Yes
Note on mismating protection	All *WINSTA*® components are 100% protected against mismating when: a.) plugging different numbers of poles b.) plugging while rotated 180 c.) plugging while laterally staggered d.) plugging one pole
Locking lever	Can be retrofitted
Locking of plug-in connection	Locking lever
Note on locking system	All connectors for mounted installations (snap-in versions for lighting fixtures or devices, all types of PCB and distribution connectors) are factory-equipped with locking levers to ensure plugs and sockets are securely locked. Additional locking levers are only required for flying leads (plug/socket).

Material data

Note (material data)	Information on material specifications can be found here
Color	black
Insulation material (main housing)	Polyamide (PA66)
Flammability class per UL94	V0
Fire class per EN 50575	E_{ca}
Contact material	Copper or copper alloy; surface-treated
Contact Plating	Tin
Fire load	89.431 MJ
Connector color	black
Strain relief color	black
Printing color of strain relief	white

 Continued on next page

Material data

Sheathed cable color	black
Printing color of sheathed cable	white
Halogen-free	No
Silicon-free	Yes
Sheath material	PVC
Rubber cable	No
Weight	496 g
Copper weight of the pipe	0.072 kg/m

Environmental requirements

Processing temperature	-5 … +40 °C
Continuous operating temperature	-35 … +85 °C
Note on continuous operating temperature	Cable for temperatures ≤ 70 °C (including halogen-free) Insulating parts for temperatures ≤ 105 °C

Commercial data

eCl@ss 10.0	27-44-06-04
eCl@ss 9.0	27-44-06-04
ETIM 9.0	EC002587
ETIM 8.0	EC002587
PU (SPU)	1 pcs
Packaging type	unpacked
Country of origin	DE
GTIN	4044918585101
Customs tariff number	85444290900

Environmental Product Compliance

RoHS Compliance Status	Compliant,No Exemption

Approvals / Certificates

General approvals

Approval	Standard	Certificate Name
CCA DEKRA Certification B.V.	EN 61535	NTR NL-7972
KEMA/KEUR DEKRA Certification B.V.	EN 61535	71-123834

Declarations of conformity and manufacturer's declarations

Approval	Standard	Certificate Name
EU-Declaration of Conformity WAGO GmbH & Co. KG	-	-
UK-Declaration of Conformity WAGO GmbH & Co. KG	-	-

 Continued on next page

Downloads

Environmental Product Compliance

Compliance Search
Environmental Product Compliance 771-9993/007-301

Documentation

Bid Text			
771-9993/007-301	19.02.2019	xml 2.90 KB	
771-9993/007-301	04.12.2014	doc 24.50 KB	
ausschreiben.de 771-9993/007-301			

CAD/CAE-Data

CAD data
2D/3D Models 771-9993/007-301

CAE data
EPLAN Data Portal 771-9993/007-301
WSCAD Universe 771-9993/007-301
ZUKEN Portal 771-9993/007-301

1 Compatible Products

1.1 Required Accessories

1.1.1 Locking system

1.1.1.1 Locking system

Item No.: 770-101
Locking lever; for flying leads; for manual operation; black

Item No.: 770-121
Locking lever; for flying leads; for manual operation; white

Item No.: 770-111
Locking lever; for flying leads; for tool operation; black

Item No.: 770-131
Locking lever; for flying leads; for tool operation; white

 Continued on next page

1.2 Optional Accessories

1.2.1 Cover

1.2.1.1 Cover

Item No.: 770-201
Lockout cap; 12-pole, separable; for sockets; Plastic; black

Item No.: 770-221
Lockout cap; 12-pole, separable; for sockets; Plastic; white

Item No.: 770-360
Lockout cap; for plugs; 5-pole; separable; yellow

Item No.: 897-2003
Protective cap; Type2; for sockets and plugs; PVC; red

1.2.2 Installation

1.2.2.1 Mounting accessories

Item No.: 770-310
Mounting carrier; 2- to 5-pole; for flying leads; black

1.2.3 Marking

1.2.3.1 Marker

Item No.: 770-450/000-006
Marker card; Plastic; blue

Item No.: 770-450/000-001
Marker card; Plastic; green

Item No.: 770-450/000-012
Marker card; Plastic; orange

Item No.: 770-450/000-005
Marker card; Plastic; red

Item No.: 770-450
Marker card; Plastic; white

Item No.: 770-450/000-002
Marker card; Plastic; yellow

1.2.3.2 Marking strip

Item No.: 210-334
Marking strips; as a DIN A4 sheet; Strip width 5 mm; Strip length 182 mm; plain; Self-adhesive; white