Technical data sheet

Wall, floor and ceiling bracket with 3 holes A2

Item number: 1123195



The wall, floor and ceiling bracket can ideally be used as a panel for wall, floor and ceiling mounting.
Also suitable for stand and frame construction in conjunction with the mounting rails MS4141.

A2	Stainless steel
2B	Bright, treated

Master data

Item number	1123195
Type	WBDHE 41 A2
Description 1	Wall holder
Description 2	combination MS 41
Manufacturer	OBO
Dimension	134x110x102
Material	Stainless steel 1.4301
Surface Surface standard	Bright, treated
Smallest sales unit	10
Unit of quantity	Piece
Weight	73 kg
Weight unit	kg/100 pc.
CO2 Footprint (GWP) Cradle-to-Gate	4,9684 kg CO2e / 1 Piece

Technical data sheet

Wall, floor and ceiling bracket with 3 holes A2

Item number: 1123195

Dimensions

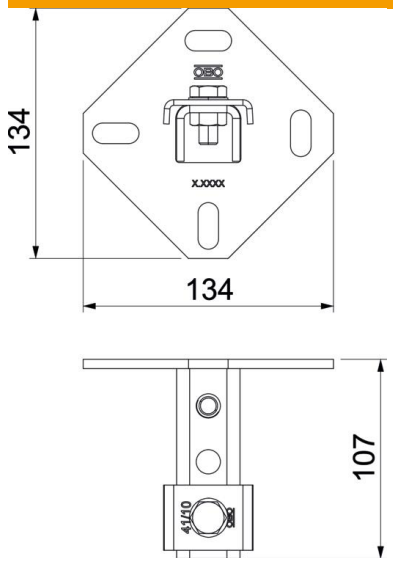

Length	102 mm
Width	134 mm
Height	110 mm

Technical data

Version for	Perforated
Hole size	25 x 11
Material thickness	5 mm
Profile shape	C profile
ROHS-conformant	yes
Slot width	22 mm
Static value A	2.97 cm²
Static value Iy	6.05 cm⁴
Static value Iz	9.01 cm⁴
Static value Wy	2.91 cm³
Static value Wz	4.4 cm³