Data Sheet | Item Number: 891-8985/206-701

pre-assembled connecting cable; Eca; Plug/open-ended; 5-pole; Cod. I; H05VV-F 5G 1.5 mm²; 7 m; 1,50 mm²; blue

https://www.wago.com/891-8985/206-701

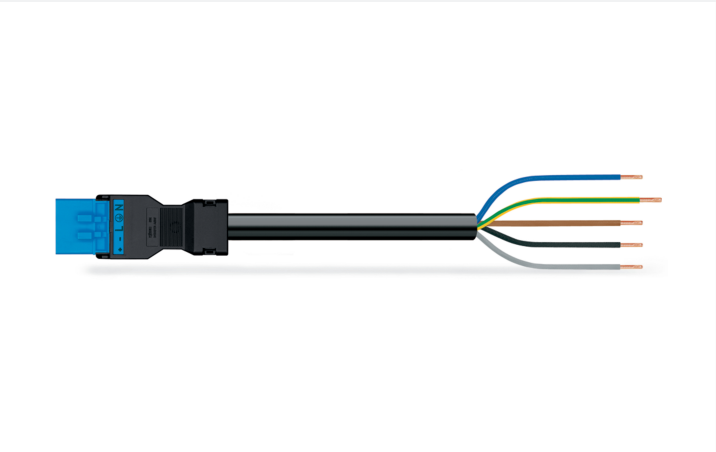

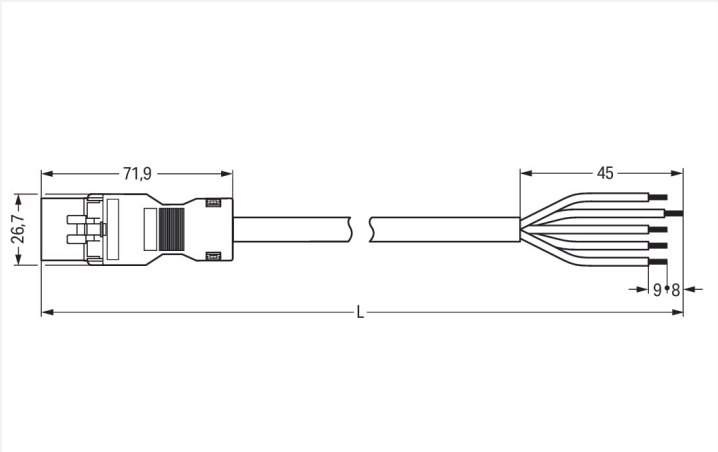

Color: blue

Dimensions in mm

Cable assembly *WINSTA*® MINI 5-pole

The *WINSTA*® MINI cable assembly rated current 16 A allows installation of solid and fine-stranded conductors. WAGO pluggable installation connectors can be used when requirements repeat or are distributed on a specific grid, for example for installing grid lighting or flush-mount lighting. The color coding and mechanical coding of the pluggable installation connector ensure error-free installation of the individual components – including protection against mismating. *WINSTA*® MINI pluggable installation connectors with I coding in blue are especially suitable for easy lighting installation, for example for the dimming of DALI lights. Thanks to its particularly compact dimensions, our *WINSTA*® MINI Pluggable Connection System with Push-in CAGE CLAMP® spring pressure connection technology is very suitable in very restricted spaces, i.e., for connections when very little room is available. This product meets all the relevant safety requirements of fire class E; as a result it can be used in areas where fire safety is relevant.

Pluggable connections instead of screw connections – cable assemblies from WAGO

The cable assembly is provided with a plug and a free end. The WINSTA® Pluggable Connection System allows pluggable electrical installation. This significantly reduces the need for servicing and lowers costs. Enjoy the benefits of the pluggable version of our maintenance-free spring pressure connection technology too! Plan your installation with with protection type IP20 from WAGO.

- pluggable installation connectors with protection against mismating
- easy tool-free operation, a wide range of coding options
- for intelligent, easy lighting installation
- custom-engineered solutions
- convenient installation and commissioning

Notes

Note	Cables with a different fire class can be found in the eShop.

Electrical data

Ratings per	IEC/EN 60664-1		
Overvoltage category	III	III	II
Pollution degree	3	2	2
Nominal voltage	400 V	-	-
Rated impulse withstand voltage	6 kV	-	-
Rated current	16 A	-	-

General information	
Note on contact resistance	approx. 1 mΩ of contact resistance approx. 0.25 mΩ contact transition plug/socket

 Continued on next page

Connection Data

Total number of potentials	5
PE function	Preceding PE contact
Conductor preparation	ultrasonically tip-bonded

Connection 1

Strip length	9 mm / 0.35 inches
Pole number	5
Wire cross-section	1.5 mm²
Strip length (outer insulation)	45 mm
Connection type	Plug - free end

Physical data

Pin spacing	4.4 mm / 0.173 inches
Width	26.7 mm / 1.051 inches
Height	15.8 mm / 0.622 inches
Total length	7 m

Mechanical data

Use	DALI, Lighting Management
Coding	I
Variable coding	No
Marking	N ⏚ L - +
Potential marking	N ⏚ L - +
Mating force of a plug-in connection	approx. 20 … 70 N (depending on pole number)
Retention force of a plug-in connection	when locked: > 80N
Unmating force of a plug-in connection	when unlocked: approx. 20 … 70 N (depending on pole number)
Number of mating cycles	200, without resistive load
Connection type	Plug - free end
Type of pre-assembled cable	Connecting cable
Cable type	H05VV-F 5G1.5
Protection type	IP20; IP40 when mated

Plug-in connection

Mismating protection	Yes
Note on mismating protection	All *WINSTA*® components are 100% protected against mismating when: a.) plugging different numbers of poles b.) plugging while rotated 180 c.) plugging while laterally staggered d.) plugging one pole
Locking lever	Can be retrofitted
Locking of plug-in connection	Locking lever
Note on locking system	All connectors for mounted installations (snap-in versions for lighting fixtures or devices, all types of PCB and distribution connectors) are factory-equipped with locking levers to ensure plugs and sockets are securely locked. Additional locking levers are only required for flying leads (plug/socket).

Material data

Note (material data)	Information on material specifications can be found here
Color	blue
Insulation material (main housing)	Polyamide (PA66)
Fire class per EN 50575	E_{ca}
Contact material	Copper or copper alloy; surface-treated
Contact Plating	Tin
Fire load	209.943 MJ
Connector color	blue
Strain relief color	black
Sheathed cable color	black

 Continued on next page

Material data

Printing color of sheathed cable	white
Halogen-free	No
Silicon-free	Yes
Sheath material	PVC
Rubber cable	No
Weight	1095.1 g
Copper weight of the raw cable	0.072 kg/m

Environmental requirements

Processing temperature	-5 … +40 °C
Continuous operating temperature	-35 … +85 °C
Note on continuous operating temperature	Cable for temperatures ≤ 70 °C (including halogen-free) Insulating parts for temperatures ≤ 105 °C

Commercial data

PU (SPU)	1 pcs
Packaging type	unpacked
Country of origin	PL
GTIN	4055143386463
Customs tariff number	85444290900

Product Classification

UNSPSC	26121629
eCl@ss 10.0	27-44-06-04
eCl@ss 9.0	27-44-06-04
ETIM 9.0	EC002587
ETIM 10.0	EC002587
ECCN	NO US CLASSIFICATION

Environmental Product Compliance

RoHS Compliance Status	Compliant,No Exemption

Approvals / Certificates

General approvals

Approval	Standard	Certificate Name
CCA DEKRA Certification B.V.	EN 61535	NTR NL-7971
KEMA/KEUR DEKRA Certification B.V.	EN 61535	71-123232

 Continued on next page

Downloads

Environmental Product Compliance

Compliance Search
Environmental Product Compliance 891-8985/206-701

Documentation

Bid Text			
891-8985/206-701	19.02.2019	xml 3.03 KB	
891-8985/206-701	02.12.2014	doc 25.50 KB	

CAD/CAE-Data

CAE data
WSCAD Universe 891-8985/206-701

1 Compatible Products

1.1 Required Accessories

1.1.1 Locking system

1.1.1.1 Locking system

Item No.: 890-111
Locking lever; for flying leads; for tool operation; black

Item No.: 890-131
Locking lever; for flying leads; for tool operation; white

Item No.: 890-101
Locking lever; for manual operation; black

Item No.: 890-121
Locking lever; for manual operation; white

1.2 Optional Accessories

1.2.1 Cover

1.2.1.1 Cover

Item No.: 897-2003
Protective cap; Type2; for sockets and plugs; PVC; red

 Continued on next page

1.2.2 Installation

1.2.2.1 Mounting accessories

Item No.: 890-310
Mounting carrier; 2- to 5-pole; for flying leads; black

Item No.: 890-311
Mounting carrier; 2- to 5-pole; for flying leads; white