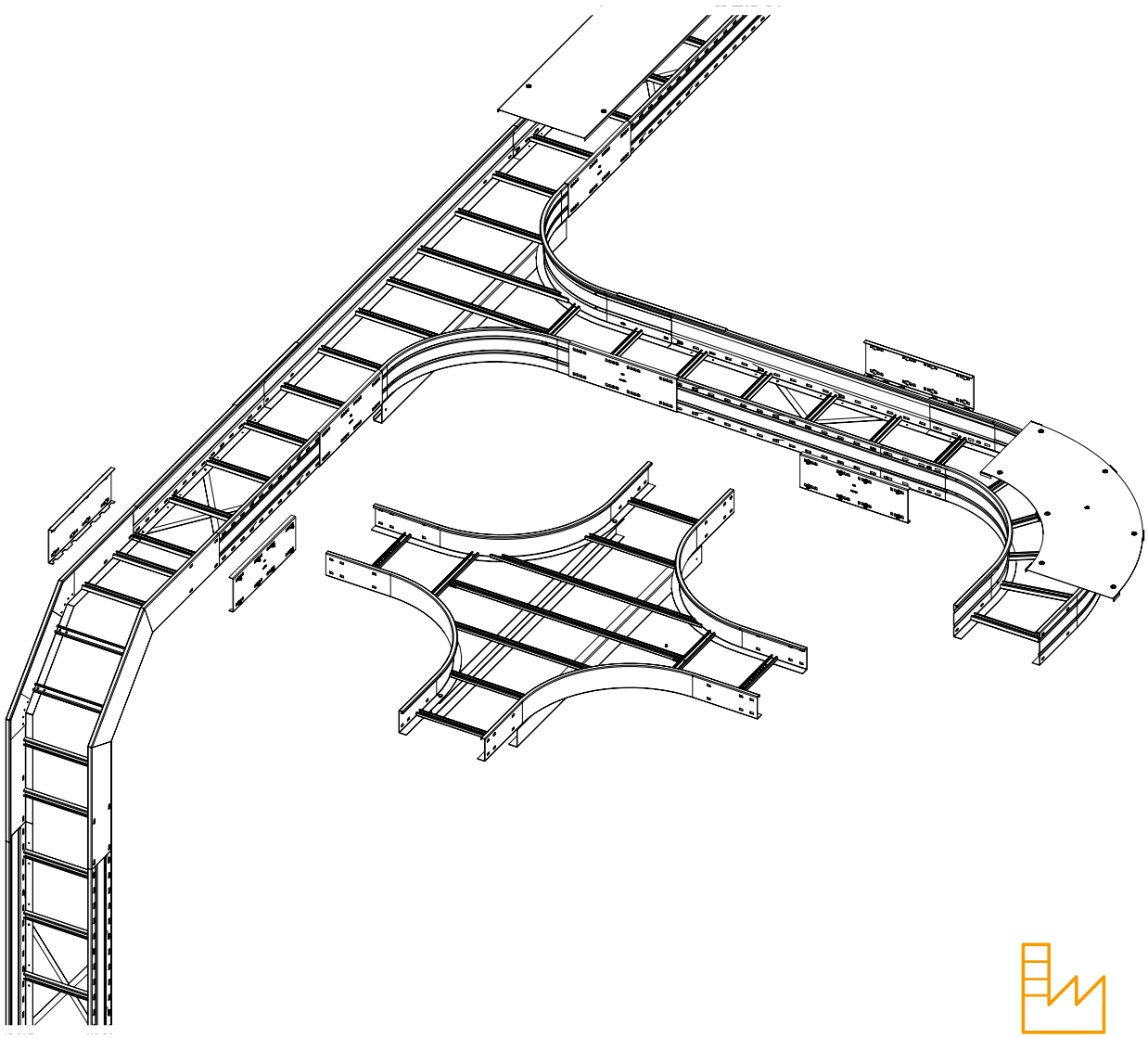

Mounting instructions

Wide span cable ladder system

OBO BETTERMANN

Wide span cable ladder system
Mounting instructions

© 2026 OBO Bettermann Holding GmbH & Co. KG

Table of contents

1 About these instructions ... 4

1.1 Target group ... 4
1.2 Relevance of these instructions ... 4
1.3 Types of warning information ... 4
1.4 Depiction conventions ... 4
1.5 Basic standards and regulations ... 5
1.6 Applicable documents ... 5

2 Intended use ... 5

3 Safety ... 6

3.1 General safety information ... 6
3.2 Personal protective equipment ... 6
3.3 Necessary tools ... 6

4 System overview ... 7

4.1 System description ... 7
4.2 Wide span cable ladders ... 7
4.3 Connectors, wide span cable ladders ... 8
4.4 Fittings, wide span cable ladders ... 10
4.5 Covers ... 13
4.5.1 Covers for wide span cable ladders ... 13
4.5.2 Covers for fittings ... 14
4.5.3 Accessories, wide span cable ladders ... 15

5 Mounting, wide span cable ladders ... 16

5.1 Cutting ladders ... 16
5.2 Connecting ladders lengthwise ... 16
5.2.1 Creating a straight connection with the WRVL straight connector ... 17
5.3 Connecting ladders at an angle ... 19
5.3.1 Creating a horizontal 45° angle connection with the WRWV angle connector ... 19
5.3.2 Creating a horizontal angle connection with the WRWVK angle connector ... 23
5.3.3 Creating a vertical 45° angle connection with the WRWV 200 V angle connector ... 25
5.3.4 Creating a vertical angle connection with the WRWVV angle connector ... 26
5.3.5 Creating a rise or drop with the WRGV adjustable connector ... 27
5.4 Mounting fittings ... 32
5.4.1 Supporting fittings ... 32
5.4.2 Mounting a WRB 90 90° bend ... 33
5.4.3 Mounting a WLBF 90 falling 90° vertical bend ... 36
5.4.4 Mounting a WLBS 90 rising 90° vertical bend ... 38
5.4.5 Mounting a WLT T branch piece ... 40
5.4.6 Mounting an add-on tee ... 44
5.4.7 Mounting a WLK cross-over ... 47
5.5 Mounting covers ... 49
5.5.1 Mounting a cover in the WDRLU DF roof shape ... 49
5.5.2 Mounting the WDRL and WKLD cover with turn buckle ... 50
5.5.3 Mounting the DRL FAM cover with spacer ... 51
5.5.4 Mounting a fitting cover ... 52

5.6 Mounting accessories 53
5.6.1 Mounting a wide span cable ladder with base plate 53
5.6.2 Mounting a clamping piece 54
5.6.3 Mounting end caps 55
5.7 Creating equipotential bonding 55

6 Maintaining the system 56

7 Dismantling the system 56

8 Disposing of the system 56

9 Technical data 57

1 About these instructions

1.1 Target group

These mounting instructions are intended for the following target group:



– Engineers and architects charged with the planning of wide span systems.

– Specialist trained in electrical engineering and charged with the mounting of wide span systems.

1.2 Relevance of these instructions

These instructions are based on the standards valid at the time of compilation (September 2026).

Please read the instructions carefully before starting mounting. We will not accept any warranty claims for damage caused through non-observance of these instructions.

Any images are intended merely as examples. Mounting results may look different.

In these instructions, cables and lines are referred to simply as cables.

1.3 Types of warning information

WARNING

Type of risk!!
Shows a risky situation. If the safety instruction is not observed, then serious or fatal injuries may occur.

CAUTION

Type of risk!!
Shows a risky situation. If the safety instruction is not observed, then medium or minor injuries may occur.

ATTENTION

Type of risk!
Shows a hazardous situation. If the safety instruction is not observed, then damage to the product or the surroundings may occur.

Note! *Indicates important information or assistance.*

1.4 Depiction conventions

To simplify legibility, the term “Ladder” will be used during the rest of these instructions for the term “Wide span cable ladder”.

The mounting of connectors and fittings shown in the graphics is identical for the 110 and 160 mm side heights. Only the components of one height are shown as an example.

1.5 Basic standards and regulations

The wide span cable ladder system fulfils the requirements of IEC 61537:2006 – Cable management – Cable tray systems and cable ladder systems.

The cable tray systems shall be installed in accordance with NEMA BI 50016 or as recommended by the manufacturer.

1.6 Applicable documents

The declarations of conformity are linked to the products at www.obo.de.

Mounting instructions for different support structures:

– U support systems
www.obo.de/out/media/04-150_MA_U_support_systems.pdf

– I support systems,
www.obo.de/out/media/04-150_MA_I_support_systems.pdf

– Clamp fastenings
www.obo.de/out/media/04-150_MA_Clamp_fastening_systems.pdf

2 Intended use

The wide span cable ladder system is used to carry and guide cables of all kinds, taking the approved load values into account. Span widths of up to 8 metres can be implemented with the wide span cable ladder system. Depending on the corrosion protection used, it can be mounted both indoors and outdoors. The wide span cable ladder system is not designed to carry people.

The wide span cable ladder system is suitable for use at ambient temperatures of –20 °C to +120 °C. At temperatures below –20 °C, the material will become brittle and may not be processed further.

The wide span cable ladder system is not designed for any purpose

other than that described here. If the wide span cable ladder system is used for any purpose, then this shall render all liability, warranty and replacement claims null and void.

3 Safety

3.1 General safety information

Observe the following general safety information:

– Only have electrical work carried out by specialist personnel with electrical training.

– Risk of cutting from plate edges. Wear protective gloves.

– Lay out the wide span cable ladder system according to the loads to be expected.

– If necessary, include the wide span cable ladder system in the equipotential bonding.

3.2 Personal protective equipment

List of personal protective equipment to be used:



Use hand protection



Wear eye protection



Wear eye protection

3.3 Necessary tools

List of required tools:

– Angle grinder

– Deburring tool

– Drill, metal drill

– Torque spanner

– Screwdriver

– Folding yardstick

– Pencil

– Tool to draw on angles

4 System overview

4.1 System description

The wide span cable ladder system is used to route cables and is specially designed for high support loads and wide support spacings. The ladder and fitting widths vary between 200 and 600 mm. Using

connector perforations, wide span cable ladders are screwed to each other using the appropriate fastening material. The selection of the right ladders is dependent on the area of application and the cable load and quantity to be routed.

Countless connectors, covers, fittings such as bends, T branch pieces and cross-overs, as well as accessories, are available to match the wide span cable ladders.

The ladders can be mounted on various support systems on the floor, wall or ceiling. The mounting of the support systems is described in separate mounting instructions, see „1.6 Applicable documents“ on page 6.

4.2 Wide span cable ladders

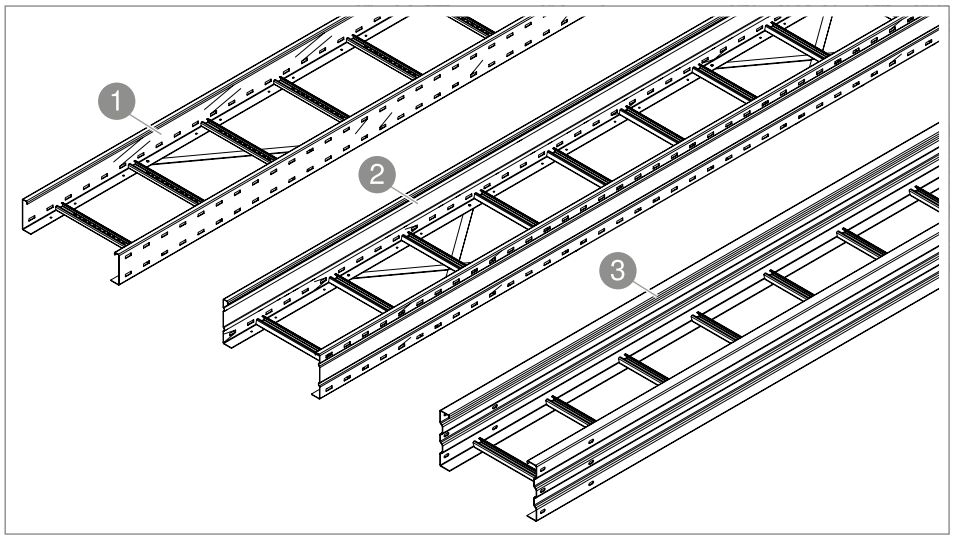

Fig. 1: Wide span cable ladders

1 1 Wide span cable ladder, height 110 mm

2 1 Wide span cable ladder, height 160 mm

3 1 Wide span cable ladder, height 200 mm

4.3 Connectors, wide span cable ladders

The following parts can be interconnected using connectors:

– Wide span cable ladders with wide span cable ladders

– Wide span cable ladder with fitting

– Fitting with fitting

Straight and adjustable connectors

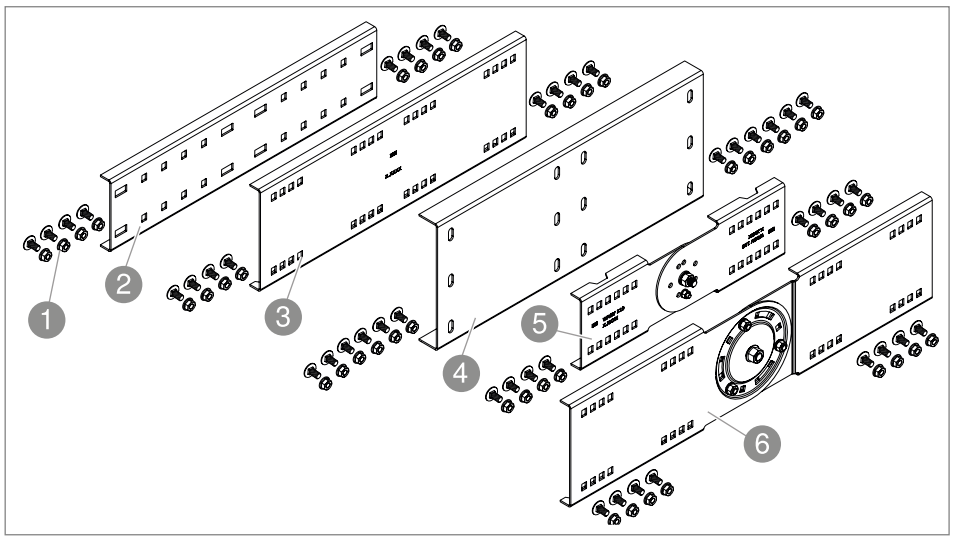

Fig. 2: Straight and adjustable connectors

No.	Designation/ type	Function	Side height
1	FRS M8 truss-head bolts with combination nuts	Connector fastening	110/160/200 mm
2	WRVL 110 straight connector	Screwed-on straight connection	110 mm
3	WRVL 160 straight connector	Screwed-on straight connection	160 mm
4	WRV 200 straight connector	Screwed-on straight connection	200 mm
5	WRGV 110 adjustable connector	Flexible vertical angle connection	110 mm
6	WRGV 160 adjustable connector	Flexible vertical angle connection	160 mm

Tab. 1: Overview, straight and adjustable connectors

Angle connectors

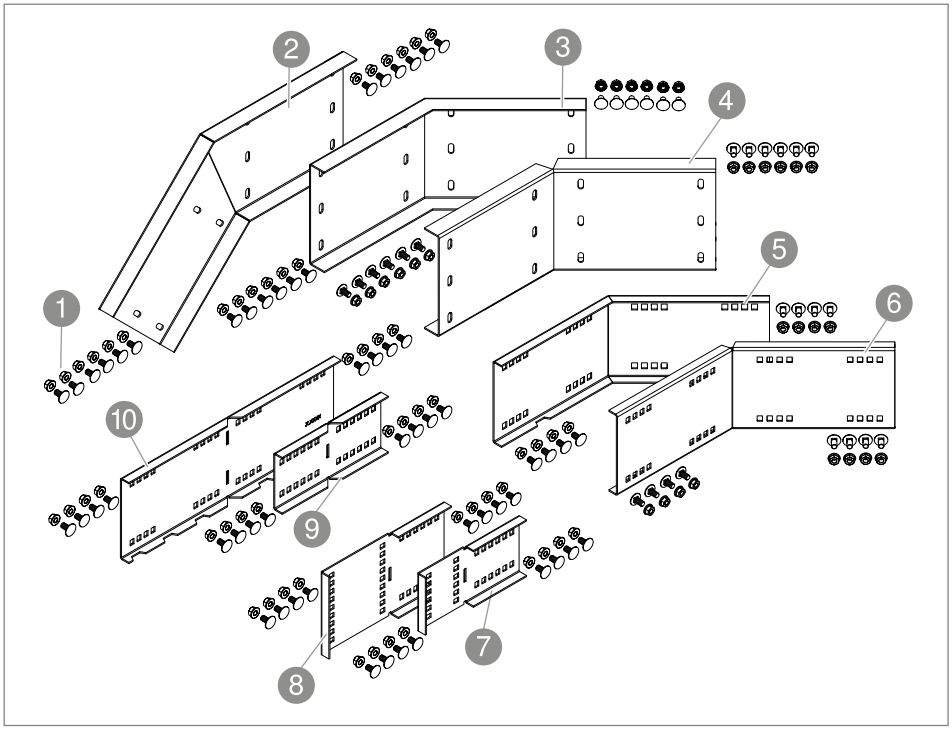

Fig. 3: Angle connector

No.	Designation/ type	Function	Side height
1	FRS M8 truss-head bolts with combination nuts	Connector fastening	110/160/200 mm
2	WRWV 200 V 45° vertical angle connector	45° horizontal angle connection	200 mm
3	WRWV 200 A horizontal angle connector, 45° external	45° horizontal angle connection	200 mm
4	WRWV 200 I horizontal angle connector, 45° internal	45° horizontal angle connection	200 mm
5	WRWV 160 A horizontal angle connector, 45° external	45° horizontal angle connection	160 mm
6	WRWV 160 I horizontal angle connector, 45° internal	45° horizontal angle connection	160 mm
7	WRWVV 110 vertical angle connector	90° vertical angle connection	110 mm
8	WRWVV 160 vertical angle connector	90° vertical angle connection	160 mm
9	WRWVK 110 angle connector	Individual horizontal angle connection	110 mm
10	WRWVK 200 angle connector	Individual horizontal angle connection	160 mm

Tab. 2: Overview of angle connectors

4.4 Fittings, wide span cable ladders

90° bends

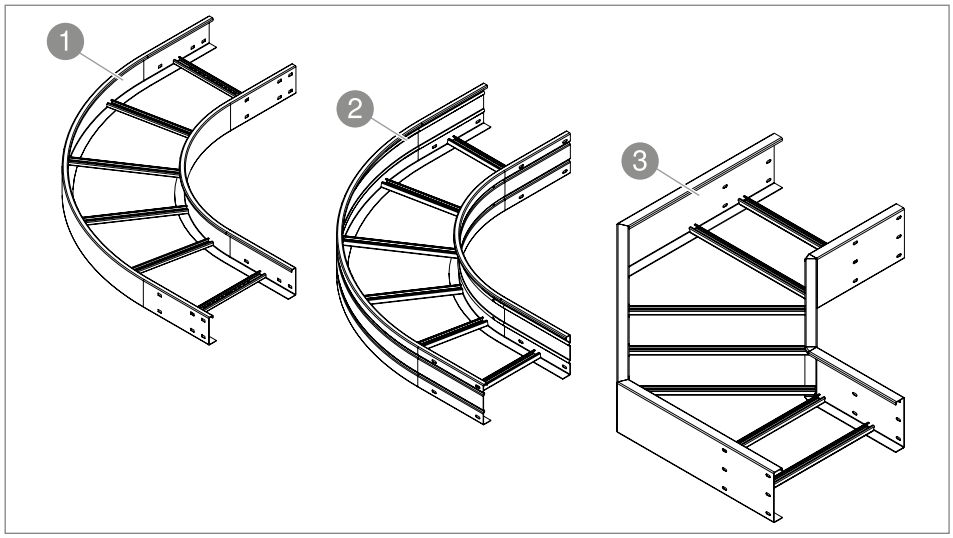

Fig. 4: 90° bends

No.	Designation/ type	Function	Side height
1	WLB 90 90° bend	Creation of 90° bend, horizontal	110 mm
2	WLB 90 90° bend	Creation of 90° bend, horizontal	160 mm
3	WLB 90 90° bend	Creation of 90° bend, horizontal	200 mm

Tab. 3: Overview of 90° bends

90° bend, rising/falling

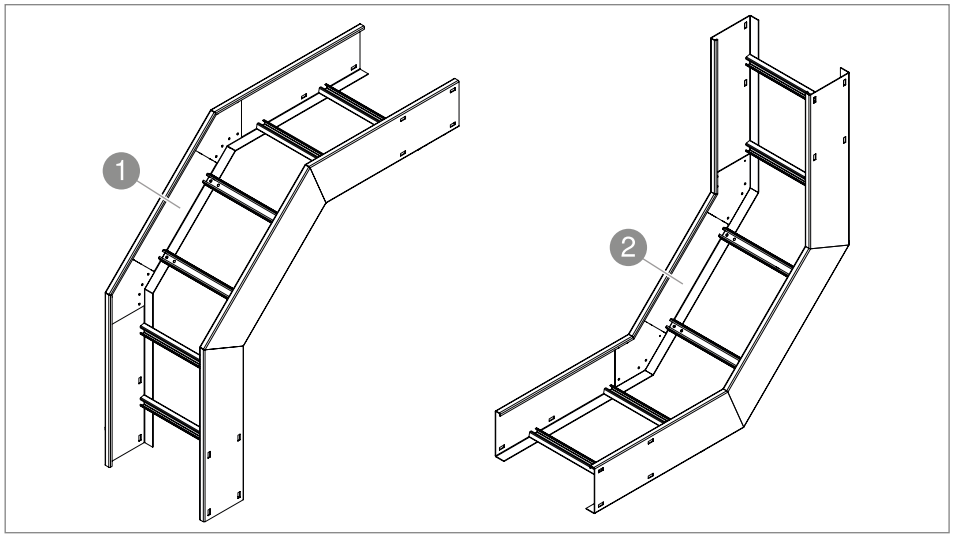

Fig. 5: 90° bend, rising/falling

No.	Designation/ type	Function	Side height
1	WLBF 90 90° bend, falling	Creation of 90° bend, horizontal	160 mm
2	WLBF 90 90° bend, rising	Creation of 90° bend, horizontal	160 mm

Tab. 4: Overview 90° bend, rising/falling

T branch pieces

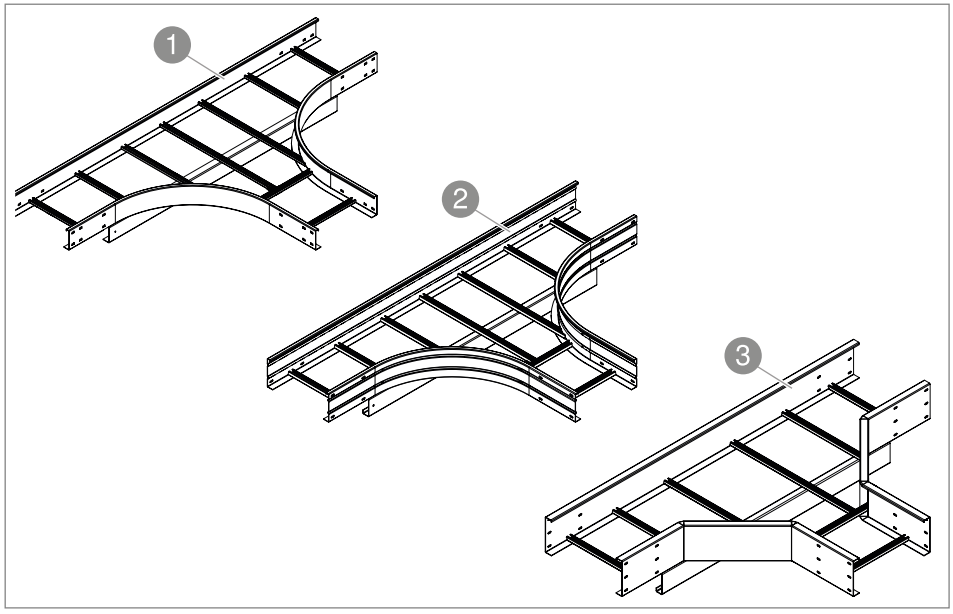

Fig. 6: T branch pieces

No.	Designation/ type	Function	Side height
1	WLT T branch piece	Creation of 90° branch	110 mm
2	WLT T branch piece	Creation of 90° branch	160 mm
3	WLT T branch piece	Creation of 90° branch	200 mm

Tab. 5: Overview of T branch pieces

Add-on tees

The add-on tee is used for wide span cable ladders and trays.

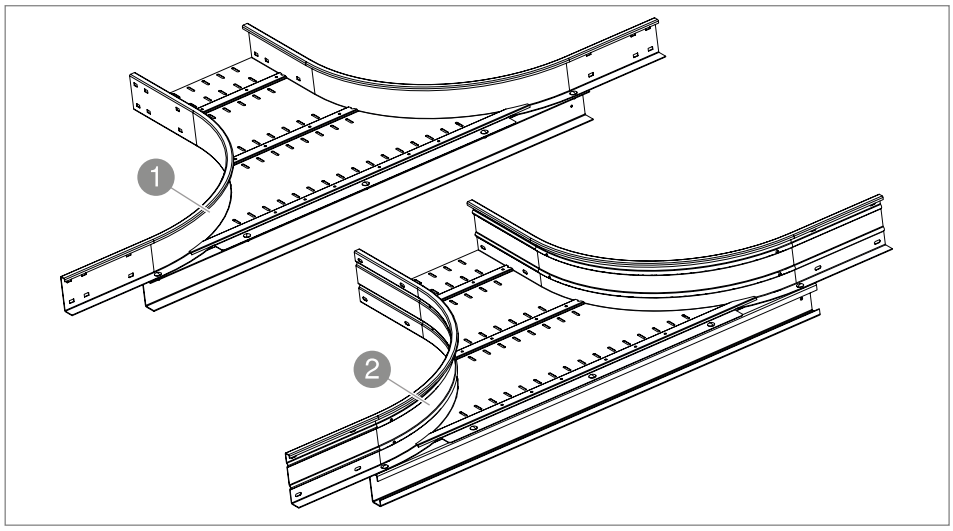

Fig. 7: Add-on tees

No.	Designation/ type	Function	Side height
1	WRAA T branch piece	Creation of 90° branch	110 mm
2	WRAA T branch piece	Creation of 90° branch	160 mm

Tab. 6: Overview of add-on tees

Cross-overs

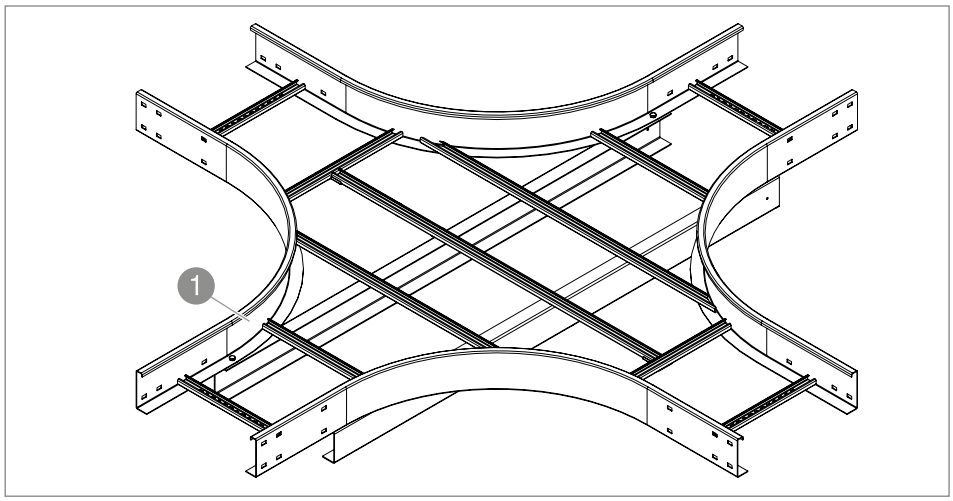

Fig. 8: Cross-overs

No.	Designation/ type	Function	Side height
1	Cross-over	Creation of two 90° branches	110 mm

Tab. 7: Overview of cross-overs

4.5 Covers

4.5.1 Covers for wide span cable ladders

Covers protect the routed cables against dirt and moisture. Depending on the routing situation, covers in roof shapes, covers with turn buckle and predrilled covers are available for the wide span cable ladders for mounting with spacers. Covers can be mounted on ladders of 110, 160 and 200 mm height. They are fastened to ladders using steel screws, pre-mounted turn buckles or with spacers.

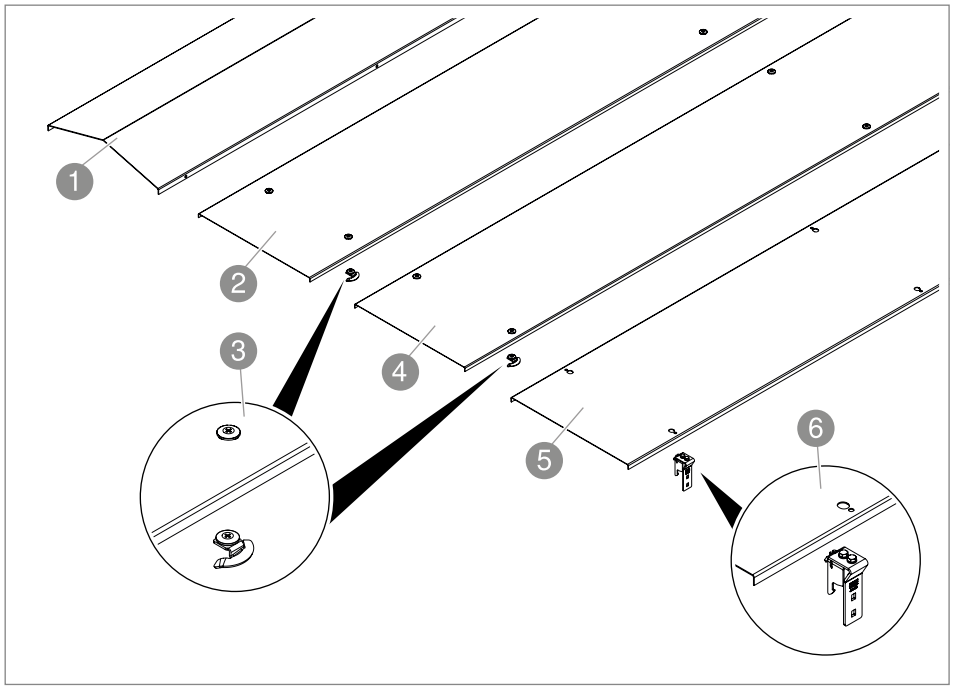

Fig. 9: Covers with fastening material

No.	Designation/	Function	for side height
1	WDRLU DF cover in roof shape	Protection against weathering and dirt	110/160/200 mm
2	WKLD cover with turn buckle	Protection against weathering and dirt	110/160 mm
3	DRLH turn buckle	Cover fastening, mounting on the cover with clamps	110/160/200 mm
4	WDRL cover with turn buckle	Protection against weathering and dirt	200 mm
5	DRL FAM cover for stand-off mounting	Protection against weathering and dirt	110/160 mm
6	AH spacer	Cover fastening, mounting on the cover with screws	110/160 mm

Tab. 8: Overview of covers and fastening material

4.5.2 Covers for fittings

Covers are available for T branch piece and 90° bend fittings. The fitting covers are fastened to the ladder using turn buckles pre-mounted at the factory.

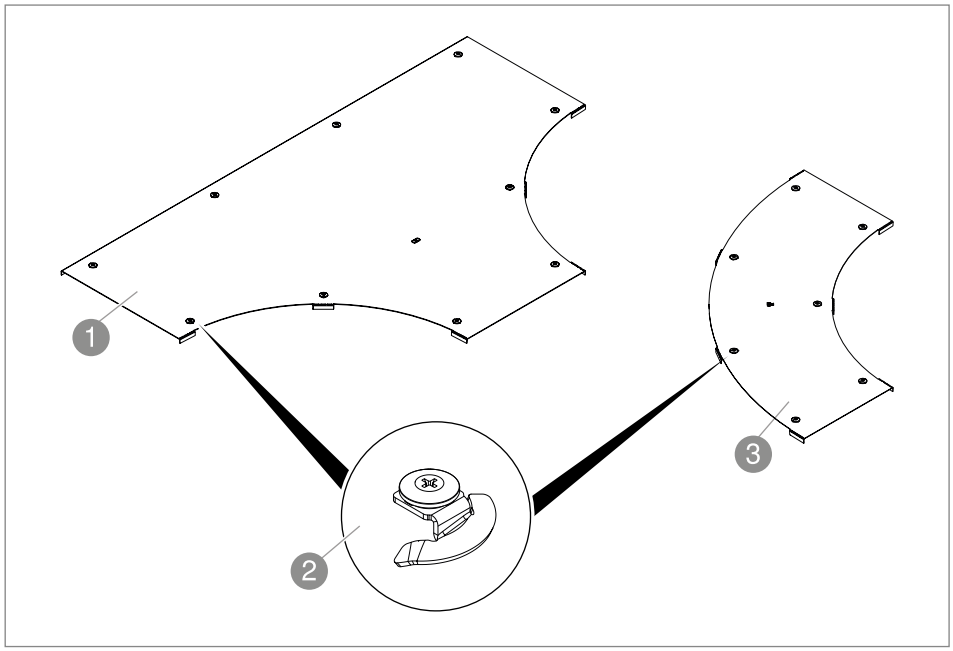

Fig. 10: Covers for fittings

No.	Designation/	Function	for side height
1	Cover for WDTRL T branch piece	Protection against weathering and dirt	110/160 mm
2	Turn buckle, pre-assembled	Cover fastening, mounting on the cover with clamps	110/160 mm
3	Cover for WDBRL 90 90° bend	Protection against weathering and dirt	110/160 mm

Tab. 9: Overview of covers for fittings

4.5.3 Accessories, wide span cable ladders

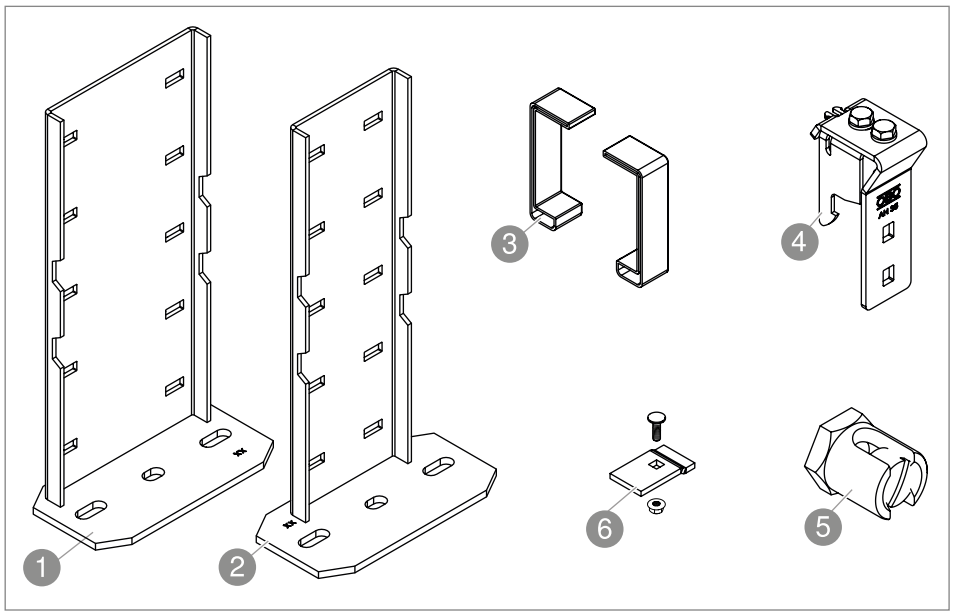

Fig. 11: Accessories

No.	Designation/	Function	for side height
1	WFP 160 base plate	Vertical mounting of wide span cable ladders	160 mm
2	WFP 110 base plate	Vertical mounting of wide span cable ladders	110 mm
3	End caps	Cover cut ladder ends	110 mm
4	Spacer	Stand-off cover mounting	110 und 160 mm
5	Earthing terminal	Creation of equipotential bonding	alle Weitspannleiterhöhen
6	LKS 60 clamping piece	Fastening of wide span cable ladders on brackets	alle Weitspannleiterhöhen

Tab. 10: Overview of accessories

5 Mounting wide span cable ladders

5.1 Cutting ladders

Ladders must be cut according to the local circumstances.

CAUTION

Risk of cutting!
During cutting work, metal chips or sharp cut edges can cause injuries to eyes and hands!
- Wear protective glasses and gloves.
- Deburr cut edges.

1. Cut ladders, e.g. with an angle grinder.

2. Deburr cut edges.

Note! *With wide span cable ladders for use in outdoor areas, after cutting, the corrosion protection on the cut edges must be renewed with zinc spray, e.g. with zinc repair spray, type ZSF, item no. 2362970, or zinc repair paint, type ZABF, item no. 2362979.*

5.2 Connecting ladders lengthwise

Ladders are connected lengthwise or at an angle with different connectors. Straight connectors connect ladders along their length. Angle connectors are used to create corners or route ladders at horizontal or vertical angles. Adjustable connectors create rises or drops.

ATTENTION

Risk of damage!
Screws can damage cables. Always pass fastening screws through the rail from the inner side of the wide span cable ladder and secure them on the outer side of the rail using combination nuts.

5.2.1 Creating a straight connection with the WRVL straight connector

The WRVL straight connector is used for 110, 160 and 200 mm ladder heights. The connector is screwed on with FRS M8 truss-head bolts and combination nuts.

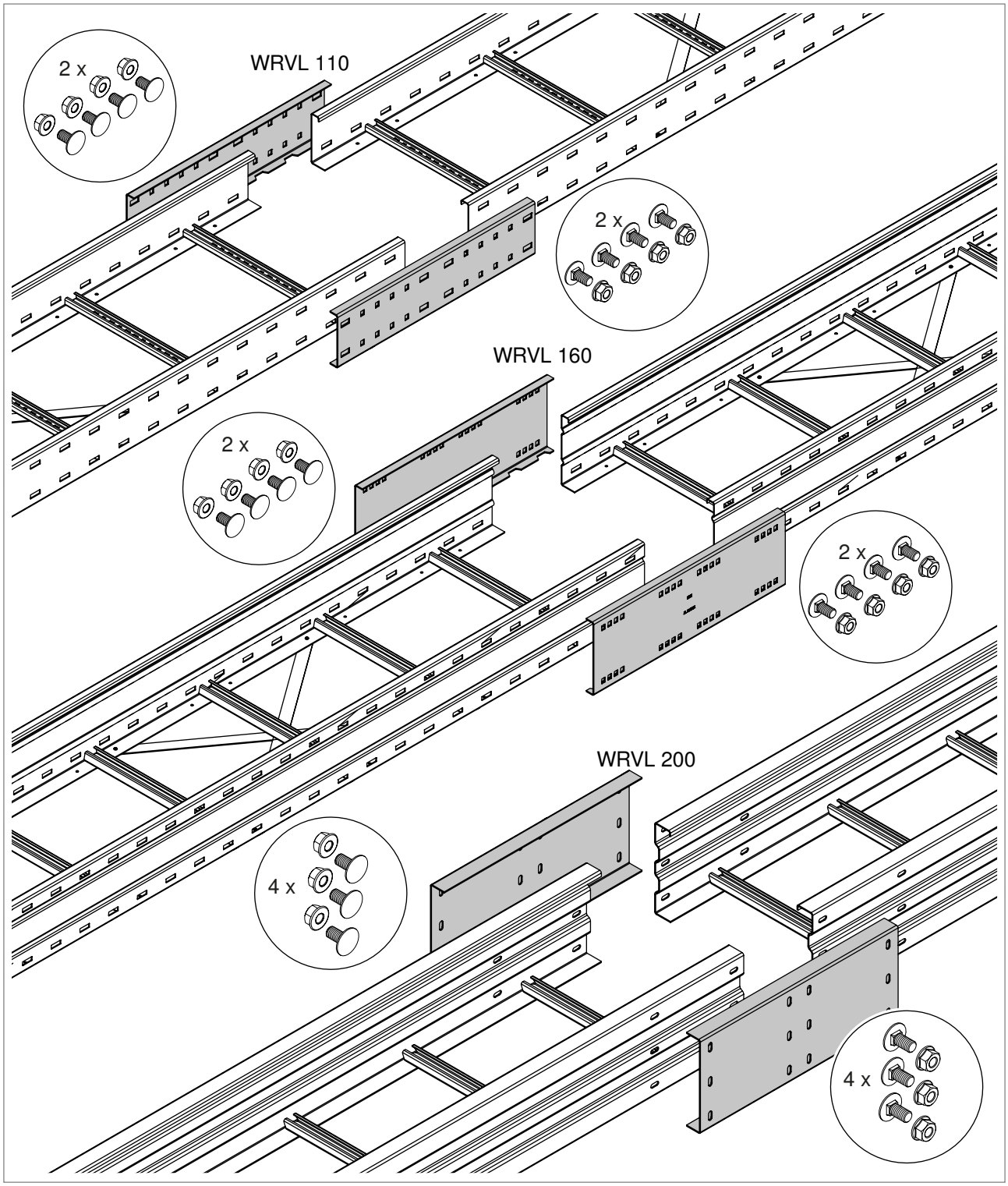

Fig. 12: Applying the WRVL straight connector

1. Apply the straight connectors to the outer sides of the rail in the area of the joints.

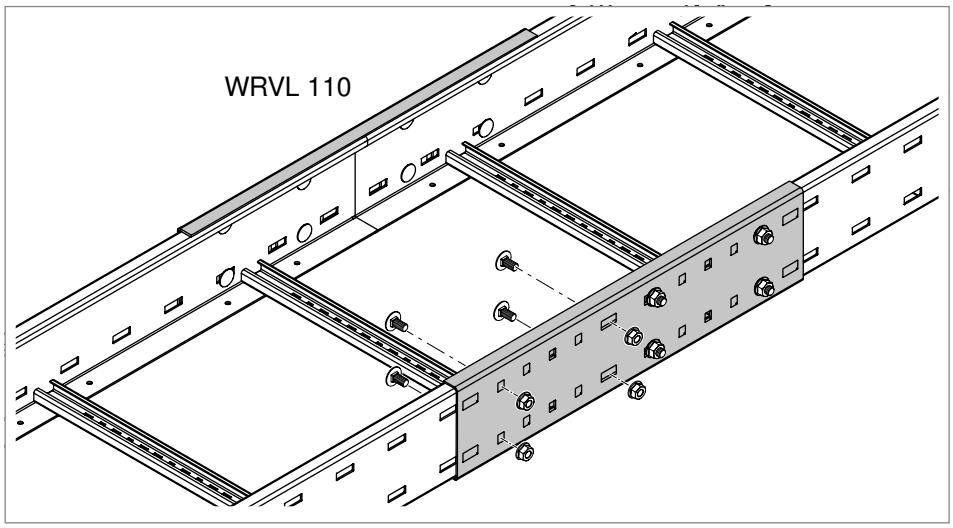

Fig. 13: Screwing on the WRVL 110 straight connector

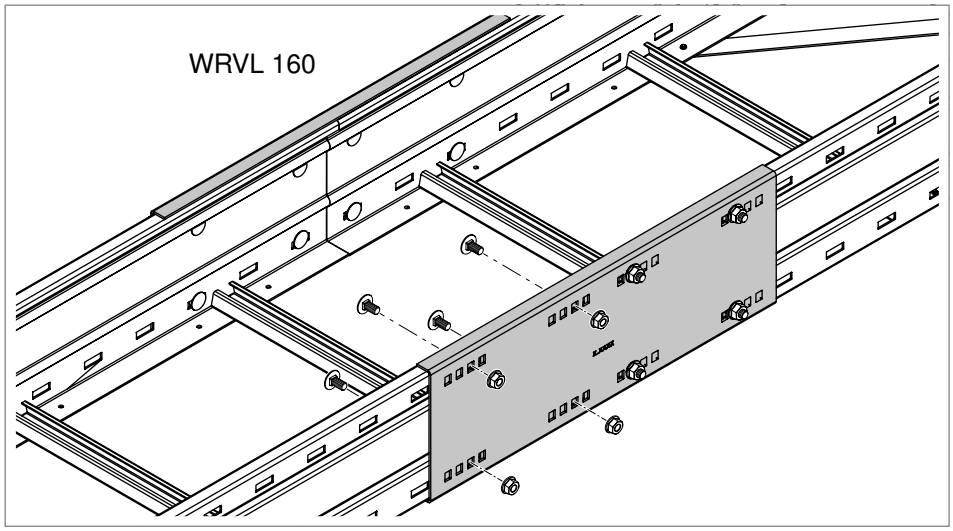

Fig. 14: Screwing on the WRVL 160 straight connector

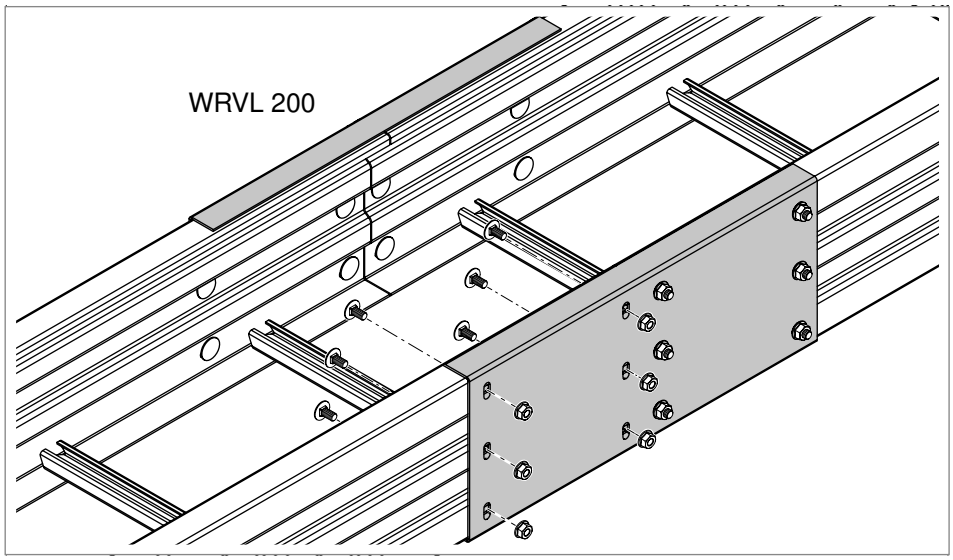

Fig. 15: Screwing on the WRVL 200 straight connector

2. Screw on the straight connector.

5.3 Connecting ladders at an angle

5.3.1 Creating a horizontal 45° angle connection with the WRWV angle connector

45° angles are created using the WRWV angle connector. The connector is available as inner and outer rail versions. It is used for ladder heights of 160 and 200 mm. The connector is screwed on with FRS M8 truss-head bolts and combination nuts.

CAUTION

Risk of destabilisation!
When cutting the cable ladder at angles, do not cut through any rungs. Cut rungs destabilise the ladders and can cause injuries.
Always separate cable ladders next to a rung.

WRWV 110/160 angle connector

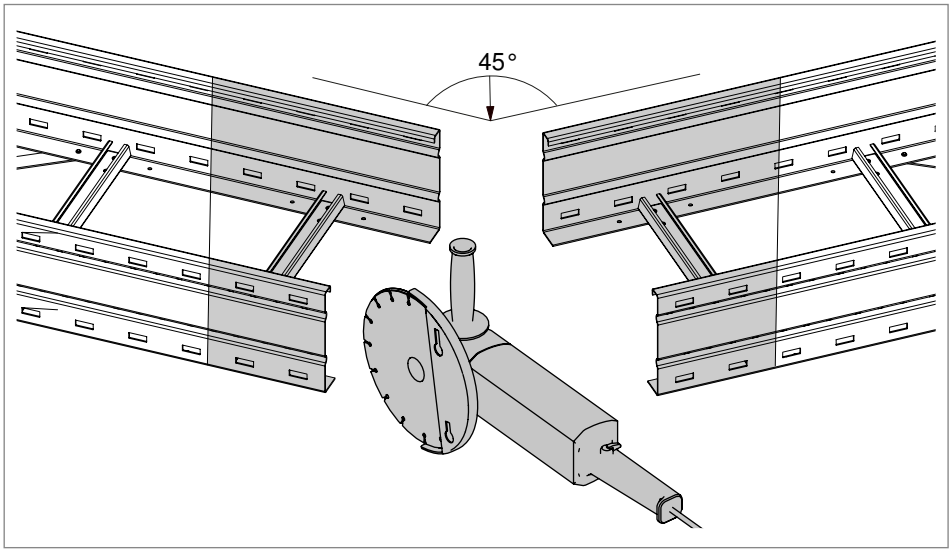

Fig. 16: Cutting ladders for angle creation

1. Measure the angle and draw on the cable ladders appropriately.
2. Cut cable ladders with an angle grinder.
3. Deburr cut edges.

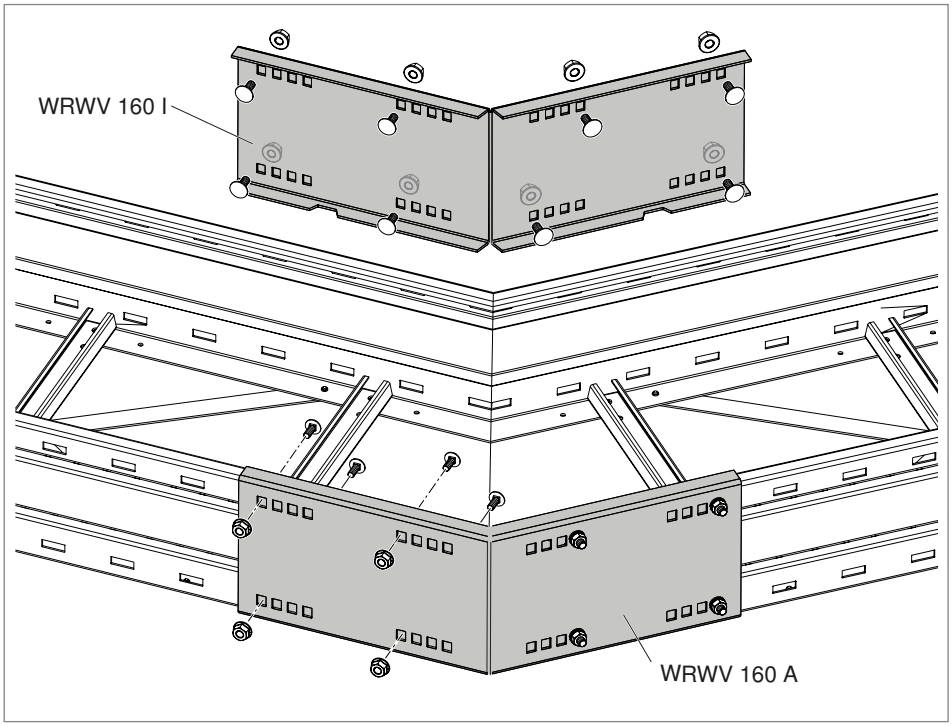

Fig. 17: Screwing WRWV angle connectors to outer and inner rails

4. From the outside, place the WRWV A angle connector to the outer rail of the ladder.

5. Screw on the angle connectors.

6. From the outside, place the WRWV I angle connector to the inner rail of the ladder.

7. Screw on the angle connectors.

WRWV 200 angle connector

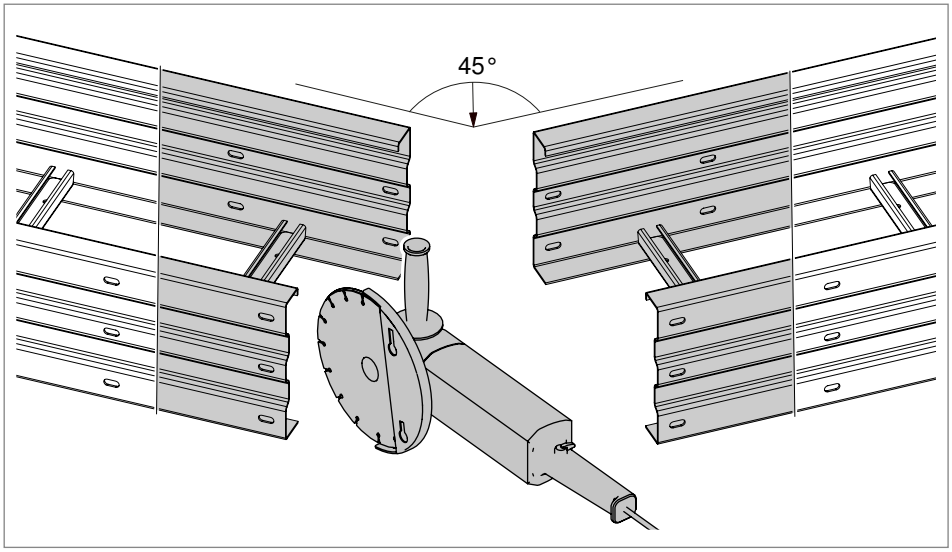

Fig. 18: Cutting ladders for angle creation

1. Measure the angle and draw on the cable ladders appropriately.
2. Cut cable ladders with an angle grinder.
3. Deburr cut edges.

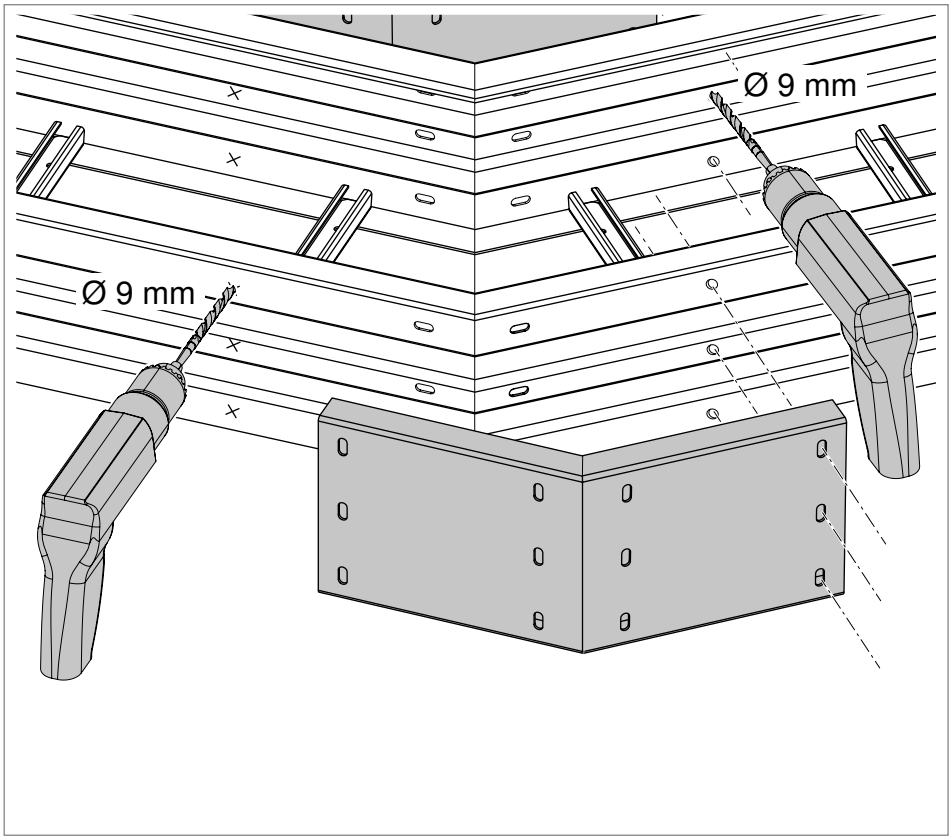

Fig. 19: Drilling the connector perforation

4. Draw on the connector perforation on the cut cable ladders.
5. Drill the ∅ 9 mm perforation for connectors.

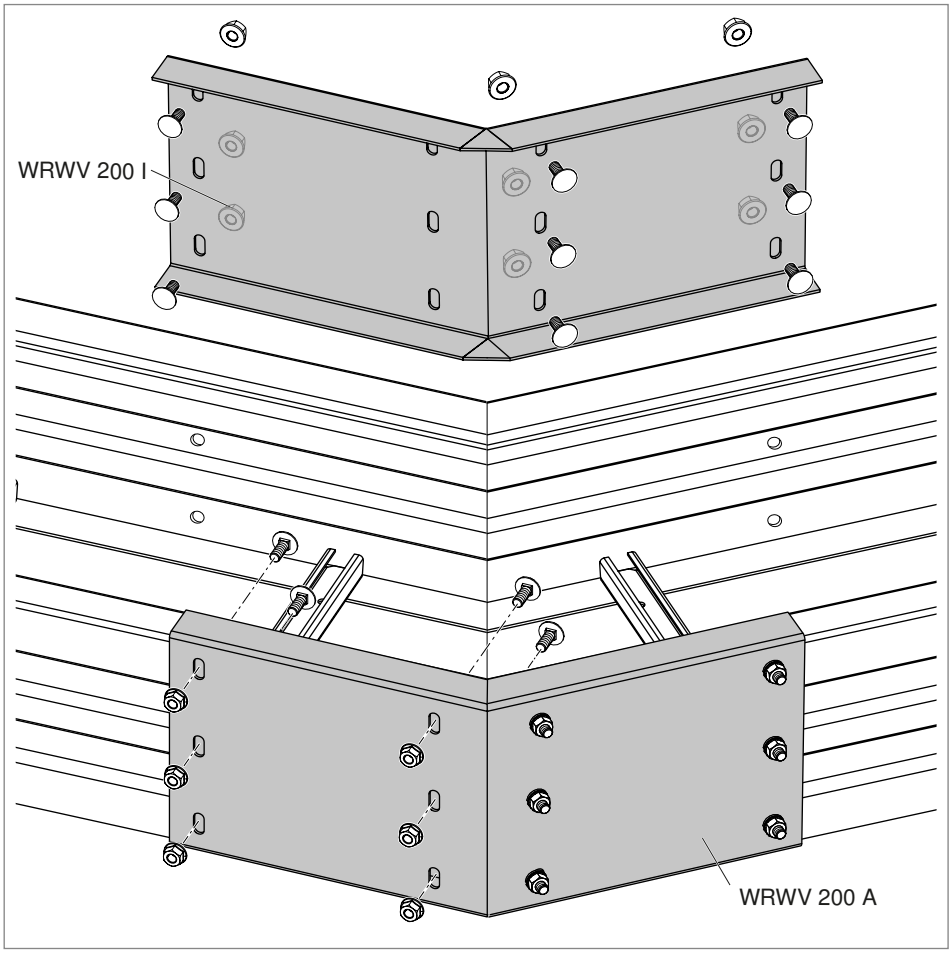

Fig. 20: Screwing on the WRWV angle connector to the inner and outer angle

6. Apply the WRWV A angle connector to the outer angle on the outer side of the rail.

7. Screw on the angle connectors.

8. Apply the WRWV I angle connector to the inner angle on the outer side of the rail.

9. Screw on the angle connectors.

5.3.2 Creating a horizontal angle connection with the WRWVK angle connector

Individual angles between 0–90° are created using the WRWVK angle connector. The angle connector can connect the inner and outer angle of two abutting ladders. It is used for ladder heights of 110 and 160 mm. The connector is screwed on with FRS M8 truss-head bolts and combination nuts.

WRWVK 110/160 angle connector

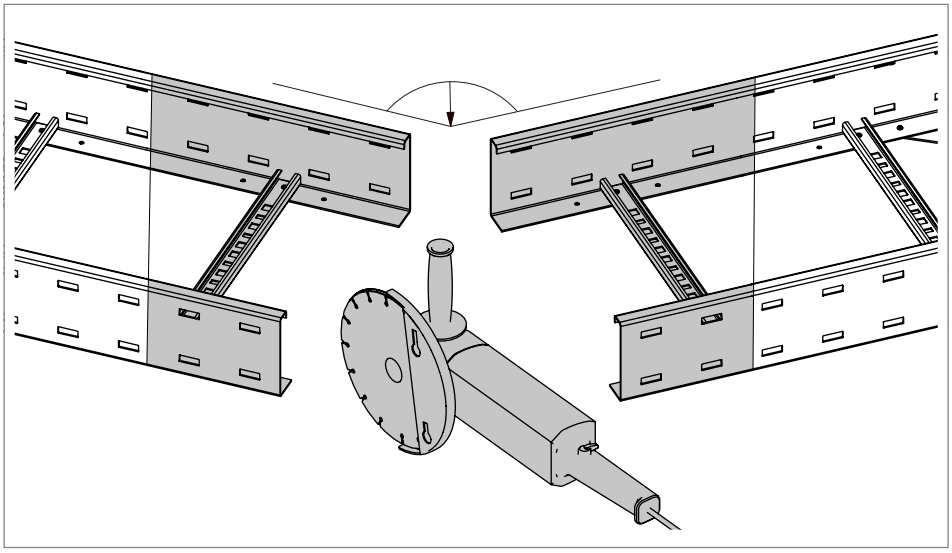

Fig. 21: Cutting ladders for angle creation

1. Measure the angle and draw on the cable ladders appropriately.
2. Cut cable ladders with an angle grinder.
3. Deburr cut edges.

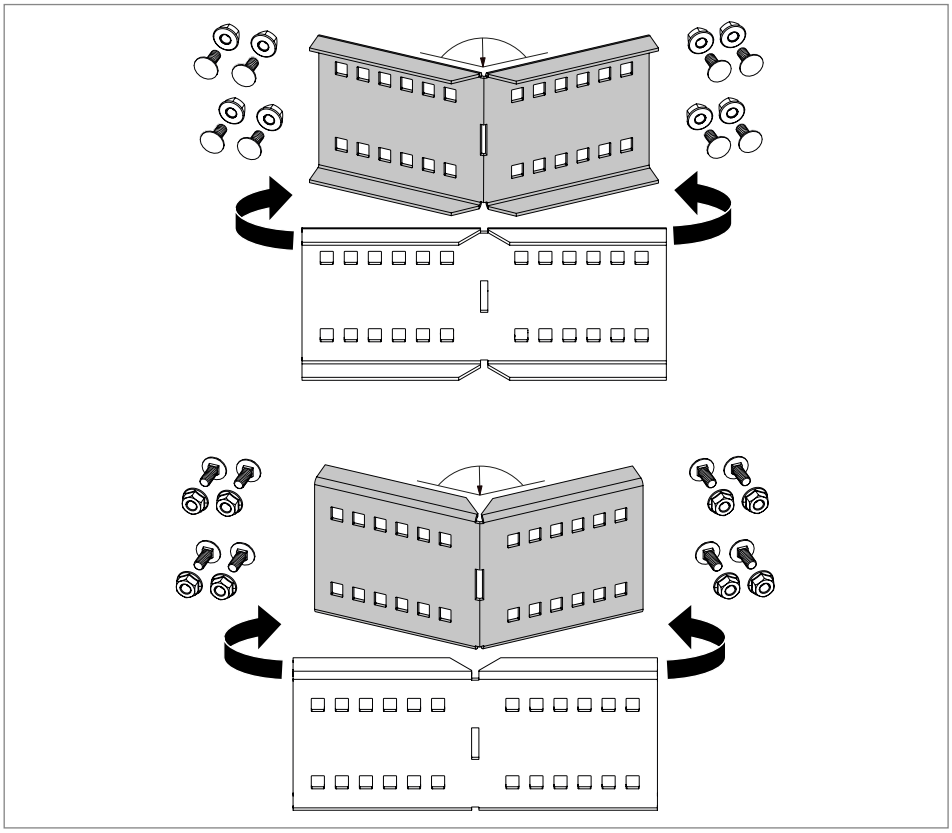

Fig. 22: Bending the WRWVK angle connector for inner and outer angles

4. Bend the angle connector for inner and outer angles at the desired angle.

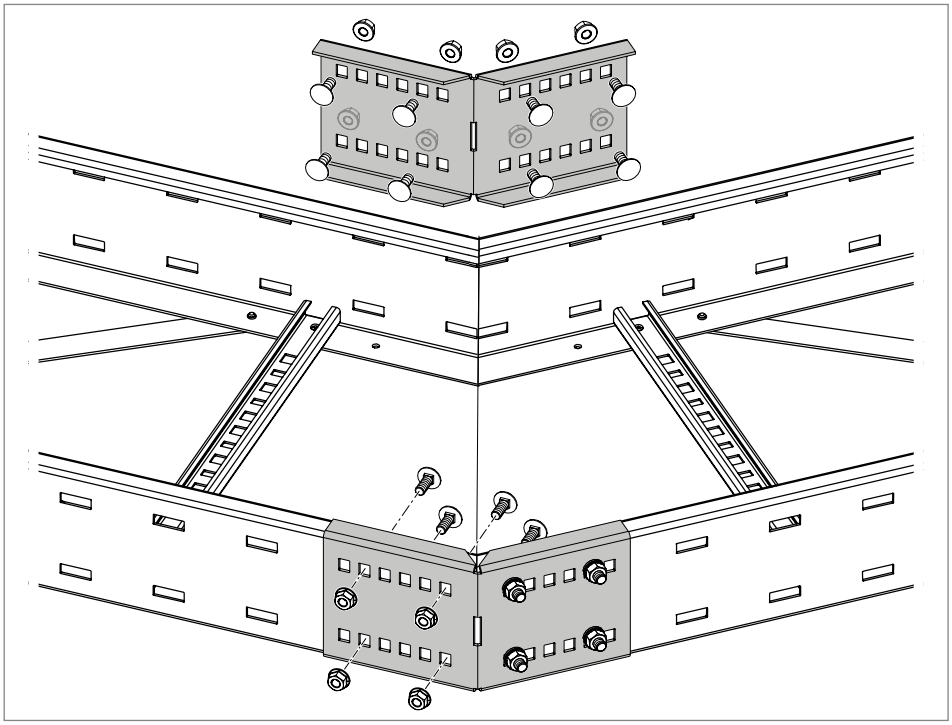

Fig. 23: Screwing on the WRWVK angle connector to the inner and outer angle

5. Apply the angle connectors to the outer sides of the rail.

6. Screw on the angle connectors.

5.3.3 Creating a vertical 45° angle connection with the WRWV 200 V angle connector

A horizontal ladder is connected to a vertical ladder at a 45° angle using the WRWV angle connector. It is used for the 200 mm ladder height. The connector is screwed on with FRS M8 truss-head bolts and combin-ation nuts.

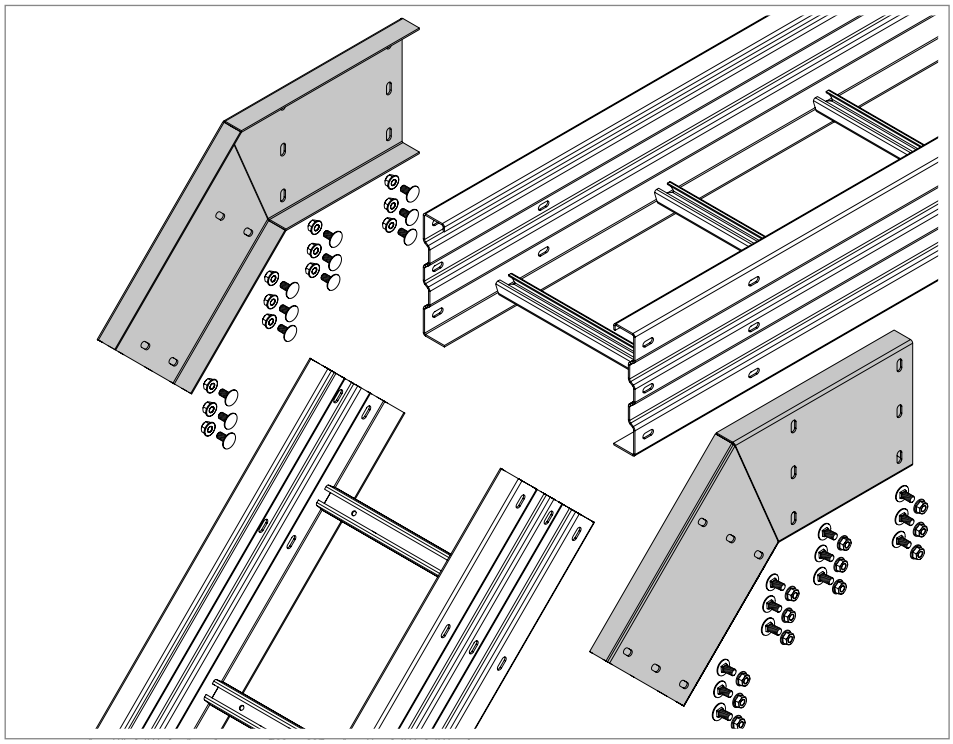

Fig. 24: WRWV 45° vertical angle connector

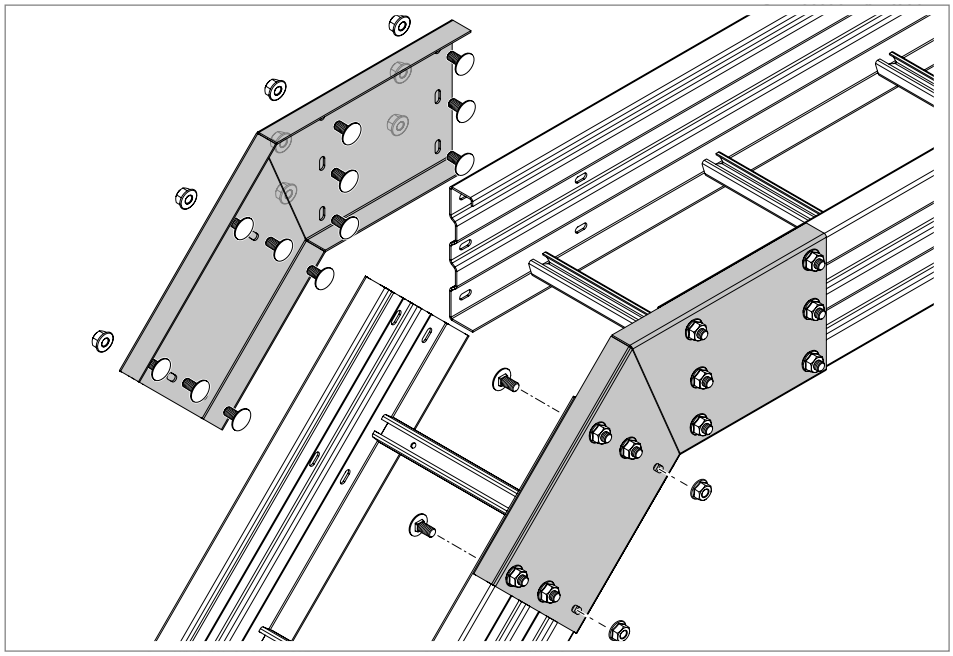

Fig. 25: Screwing on the angle connectors

1. Apply the angle connectors to the outer sides of the rail.
2. Screw on the angle connectors.

5.3.4 Creating a vertical angle connection with the WRWVV angle connector

A horizontal ladder is connected to a vertical ladder at a 90° angle using the WRWVV angle connector. It is used for the 110 and 160 mm ladder height. The connector is screwed on with FRS M8 truss-head bolts and combin-ation nuts.

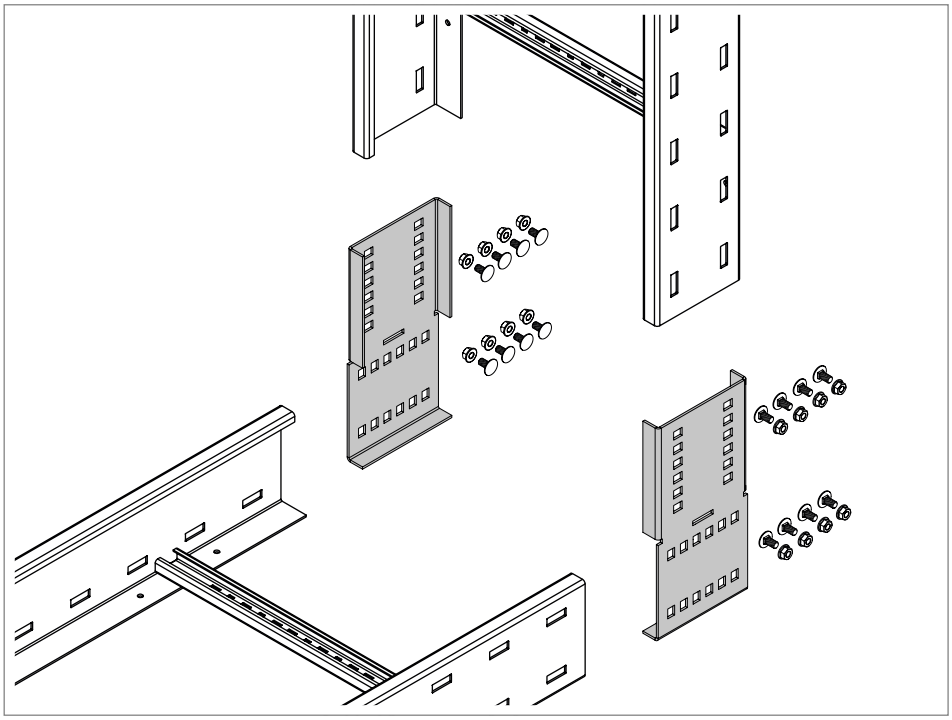

Fig. 26: WRWVV vertical angle connector

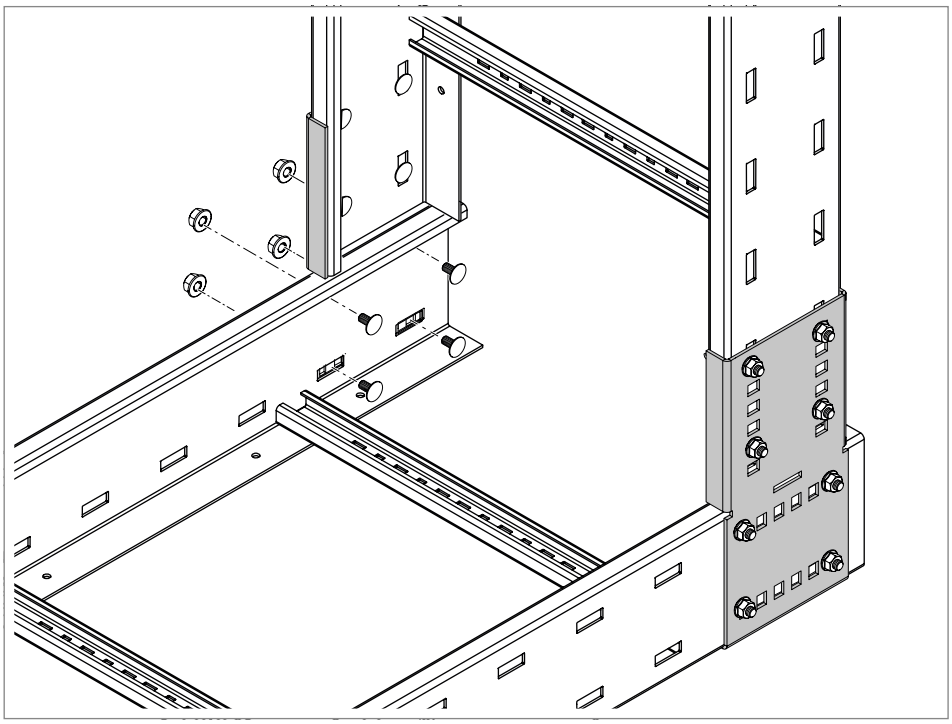

Fig. 27: Screwing on the WRWVV angle connector

1. Apply the angle connectors to the outer sides of the rail.
2. Screw on the angle connectors.

5.3.5 Creating a rise or drop with the WRGV adjustable connector

Angles of up to 90° for rises and drops are created using the WRGV adjustable connector. It is used for 110 and 160 mm ladder heights. The connector is screwed on with FRS M8 truss-head bolts and combination nuts.

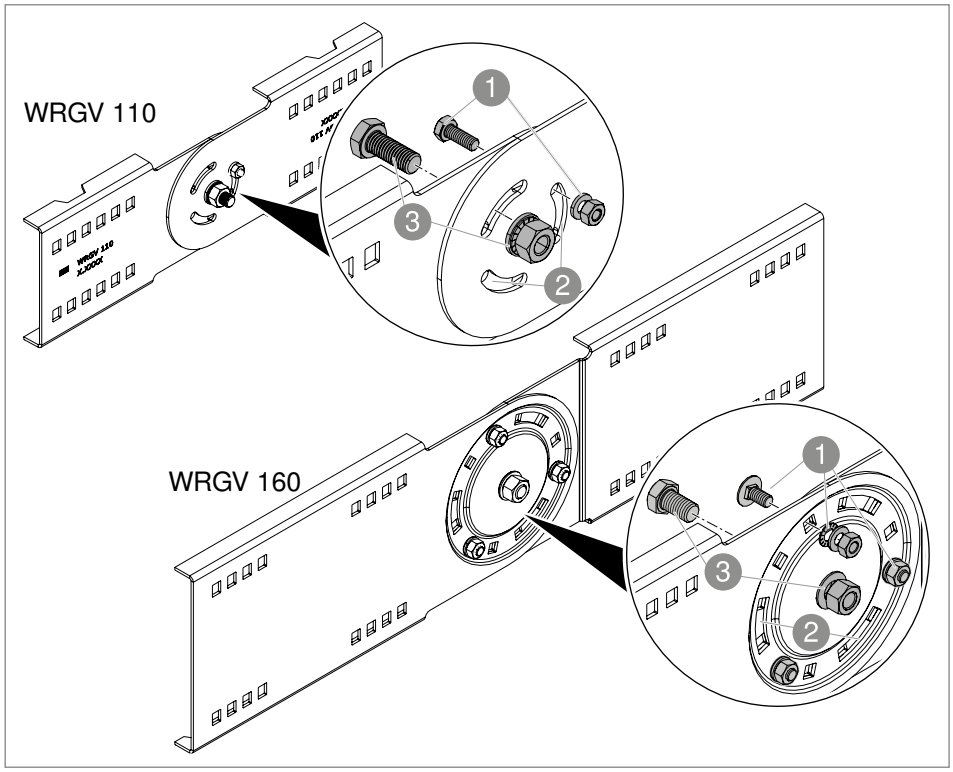

Fig. 28: Overview of WRGV adjustable connector

1 1 Locking screw

2 1 Slots

3 1 Hinge screw

WRGV 110 adjustable connector

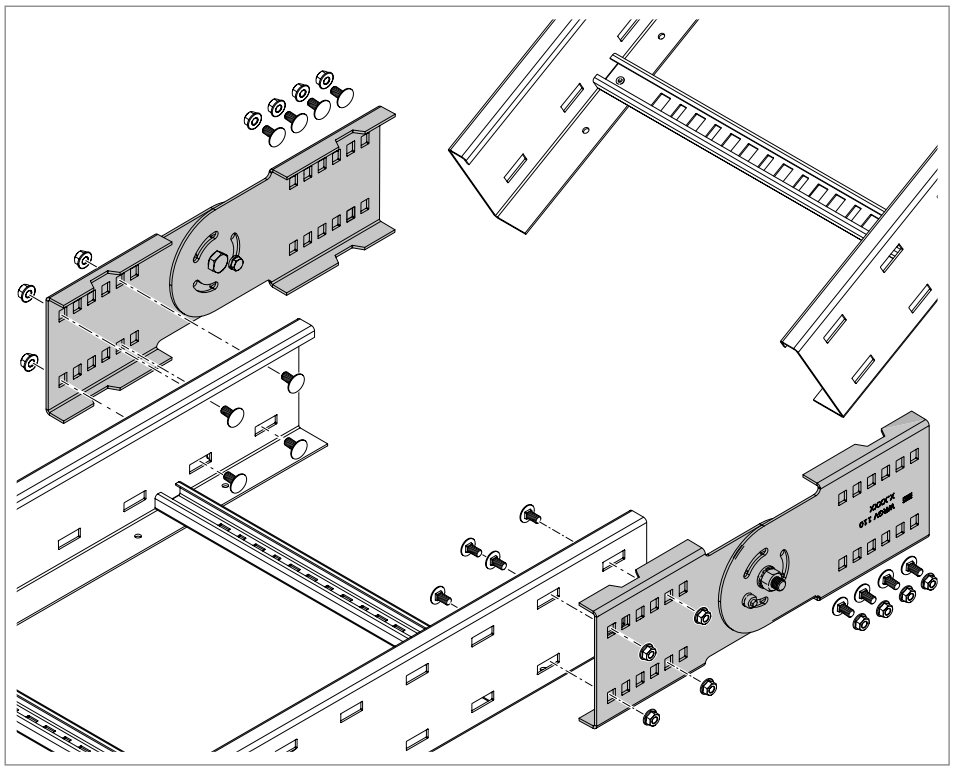

Fig. 29: Applying the adjustable connector

1. Apply the adjustable connector to the outer sides of the rail of the horizontal ladder.

2. Screw the angle adjustable connector to the horizontal ladder.

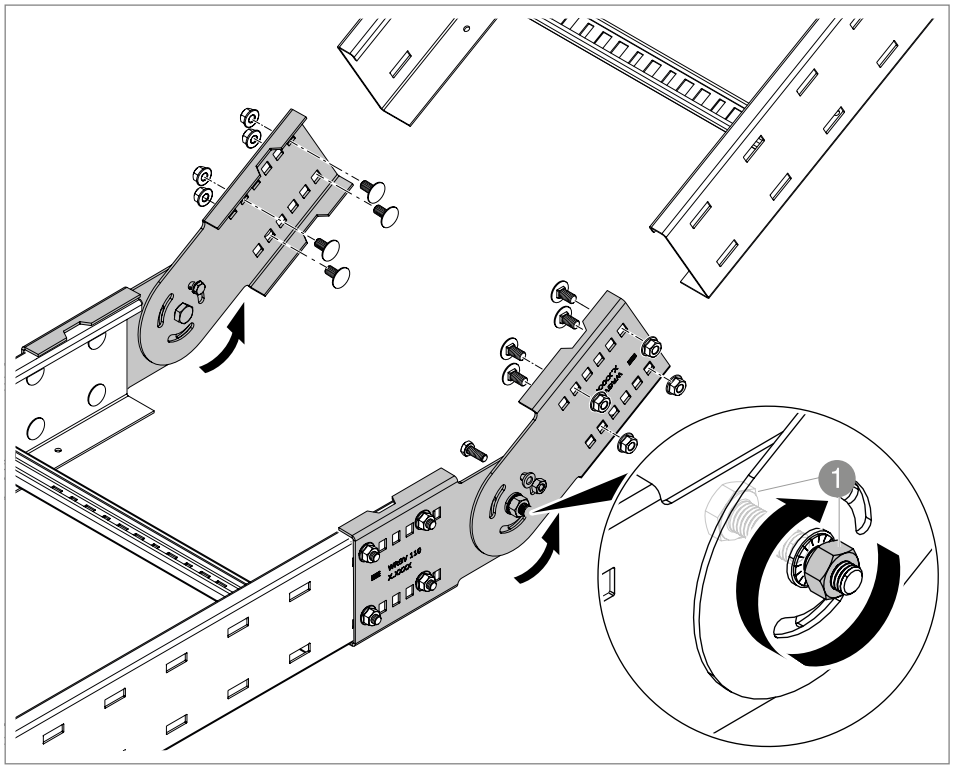

Fig. 30: Adjusting the angle

3. Dismantle the locking screw and loosen the hinge screw.
4. Adjust the desired angle on the adjustable connector.
5. Tighten the hinge screw.

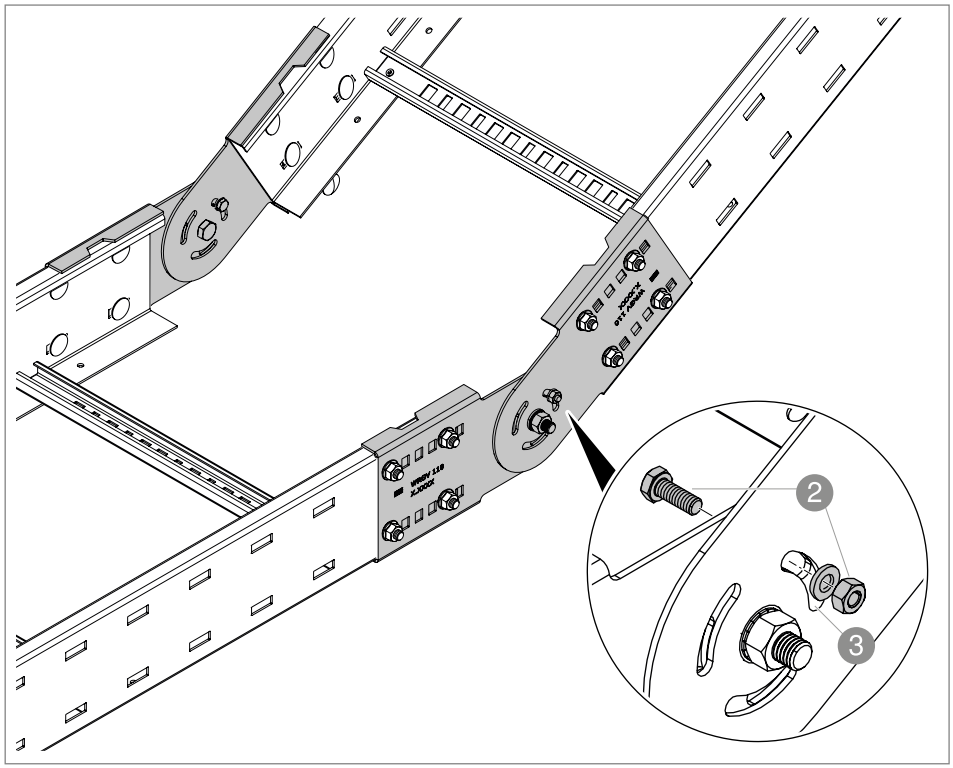

Fig. 31: Mounting rising ladders

6. Screw the angle adjustable connector to the rising ladder.
7. Secure the angle adjustment with the locking screw in the slot.

WRGV 160 adjustable connector

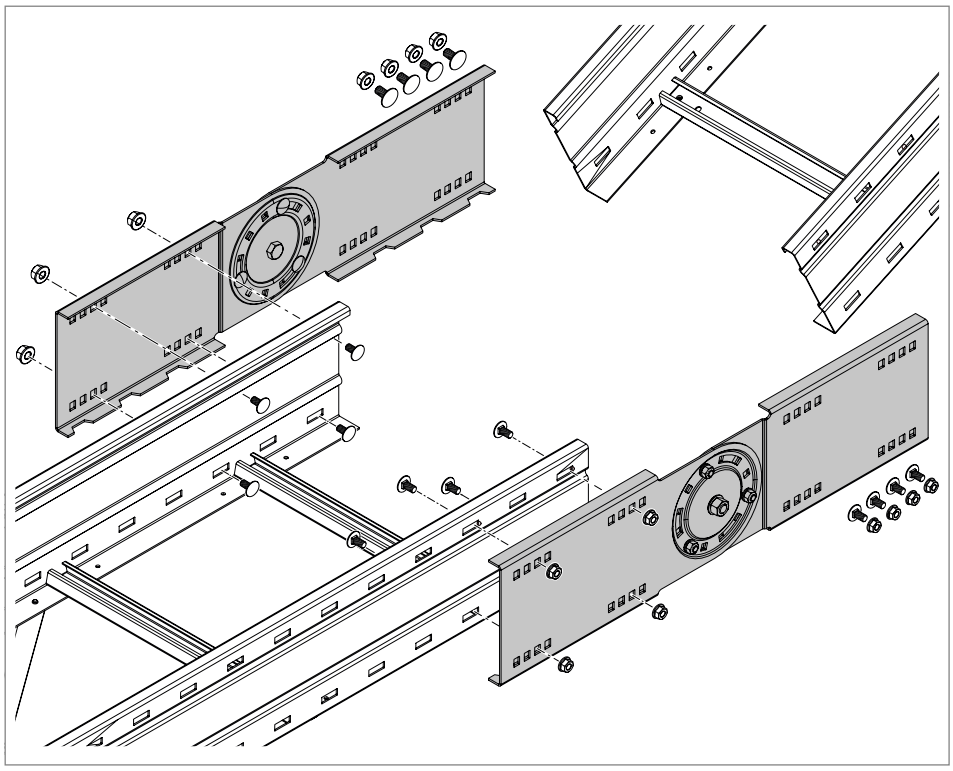

Fig. 32: Applying the adjustable connector

1. Apply the adjustable connector to the outer sides of the rail of the horizontal ladder.

2. Screw the angle adjustable connector to the horizontal ladder.

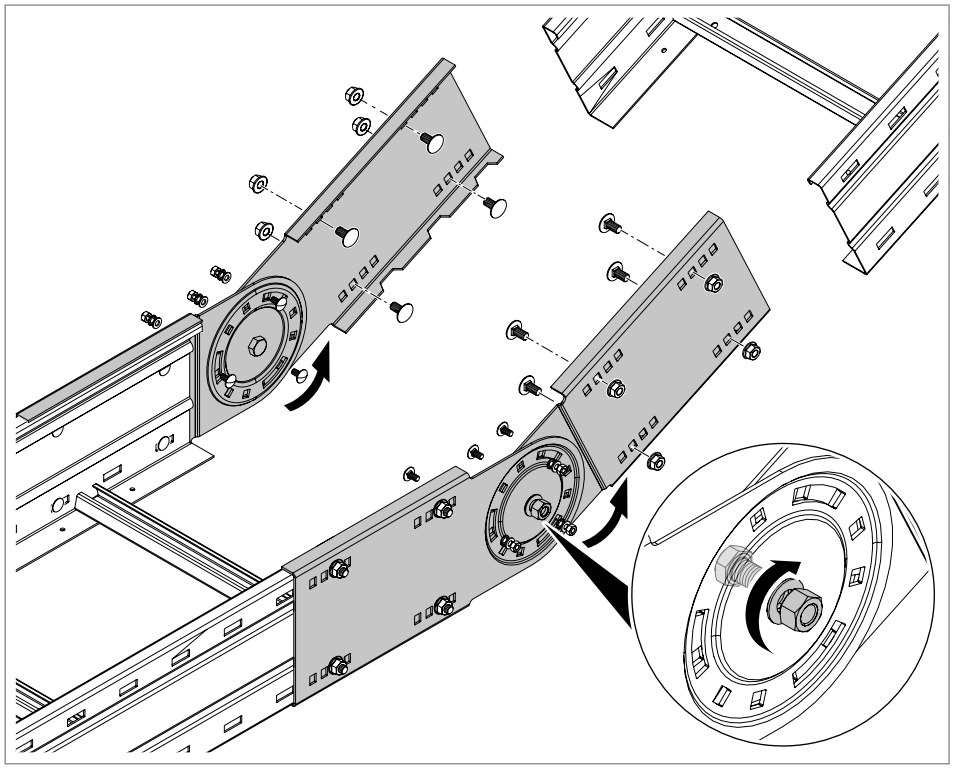

Fig. 33: Adjusting the angle

3. Dismantle the three locking screws and loosen the hinge screw.
4. Adjust the desired angle on the adjustable connector.
5. Tighten the hinge screw.

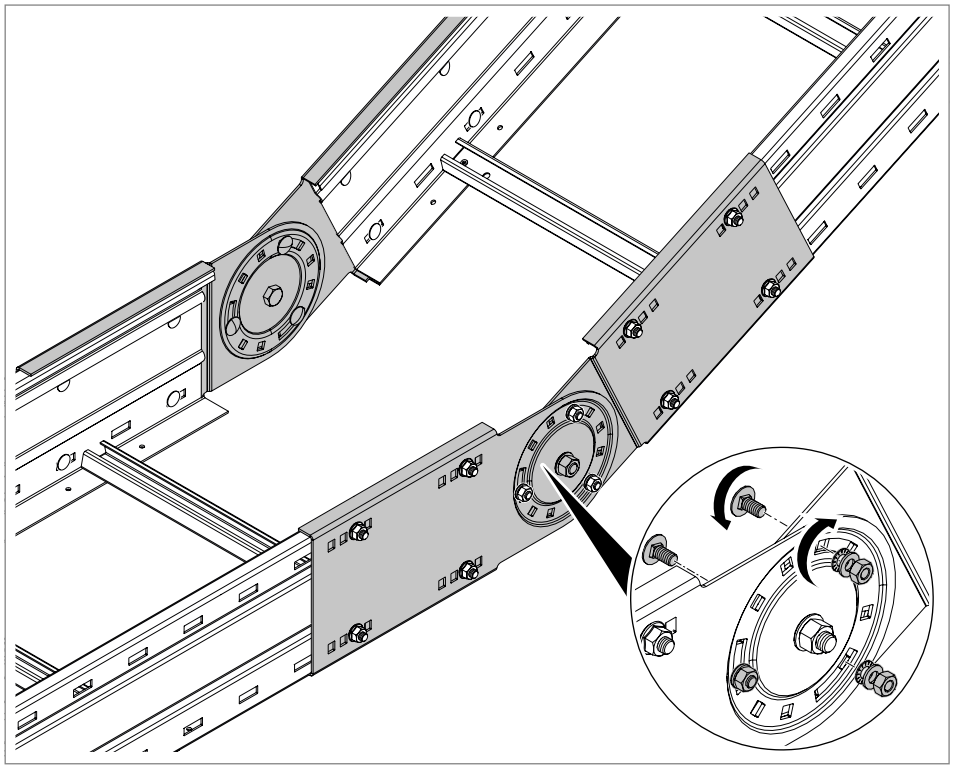

Fig. 34: Mounting rising ladders

6. Screw the angle adjustable connector to the rising ladder.
7. Secure the angle adjustment with the three locking screws in the slots.

5.4 Mounting fittings

Fittings for wide span cable ladders are used to create direction changes in the form of bends for large bending radii, as well as T branches and cross-overs.

5.4.1 Supporting fittings

Fittings must always be supported by the support system. The mounting of the different support systems is shown in special mounting instructions, see „1.6 Applicable documents“ on page 6.

WARNING

Risk of the support system falling!
If fittings are not supported, cable loads can become too heavy, destabilising the entire support system. There is a risk of the support system falling. Support the fittings with an additional support element.

Support of fitting up to 300 mm width

At a width of up to 300 mm, one ladder support at a spacing of 250–300 mm from the joint edge of the fitting is sufficient.

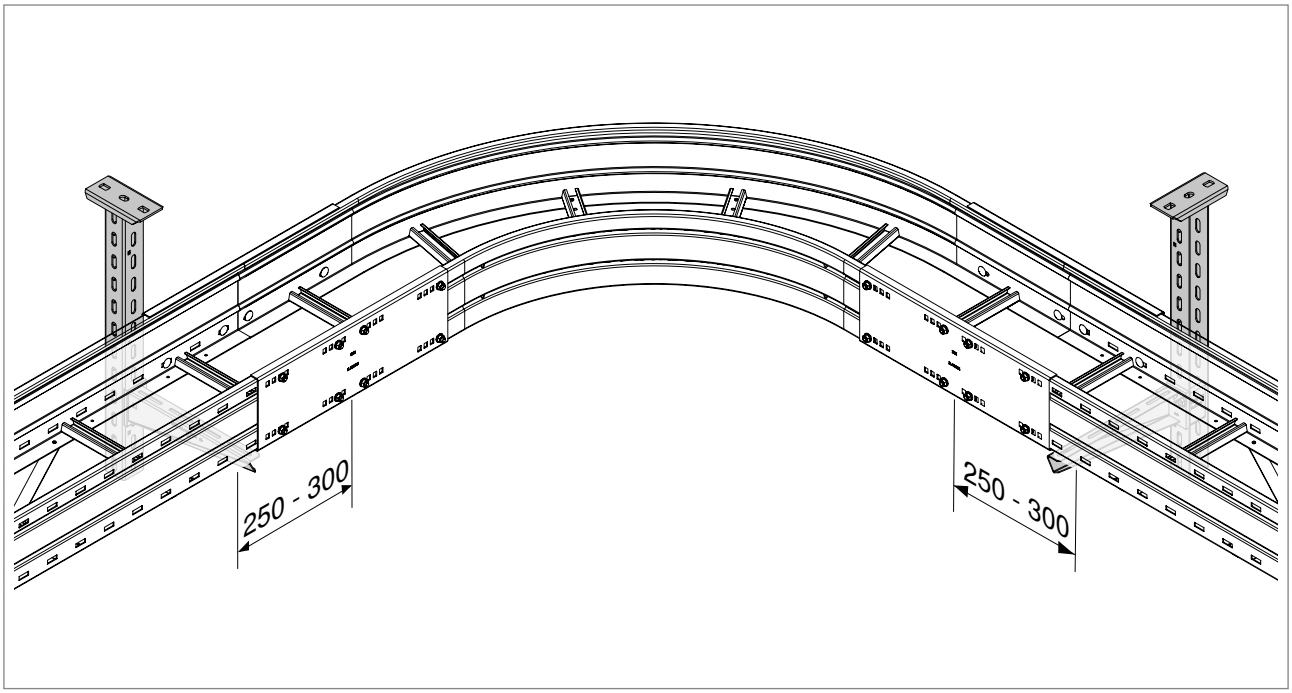

Fig. 35: Beispiel Unterstützung Formteil 90°-Bogen mit 300 mm Breite

1. Support the fitting with a support structure at a distance of 250–300 mm from the edge.

Support of fitting from 400 mm width

At a width of 400 mm or more, one ladder support is mounted at a spacing of 250–300 mm from the joint edge of the fitting. In addition, a further support element must be mounted under the fitting.

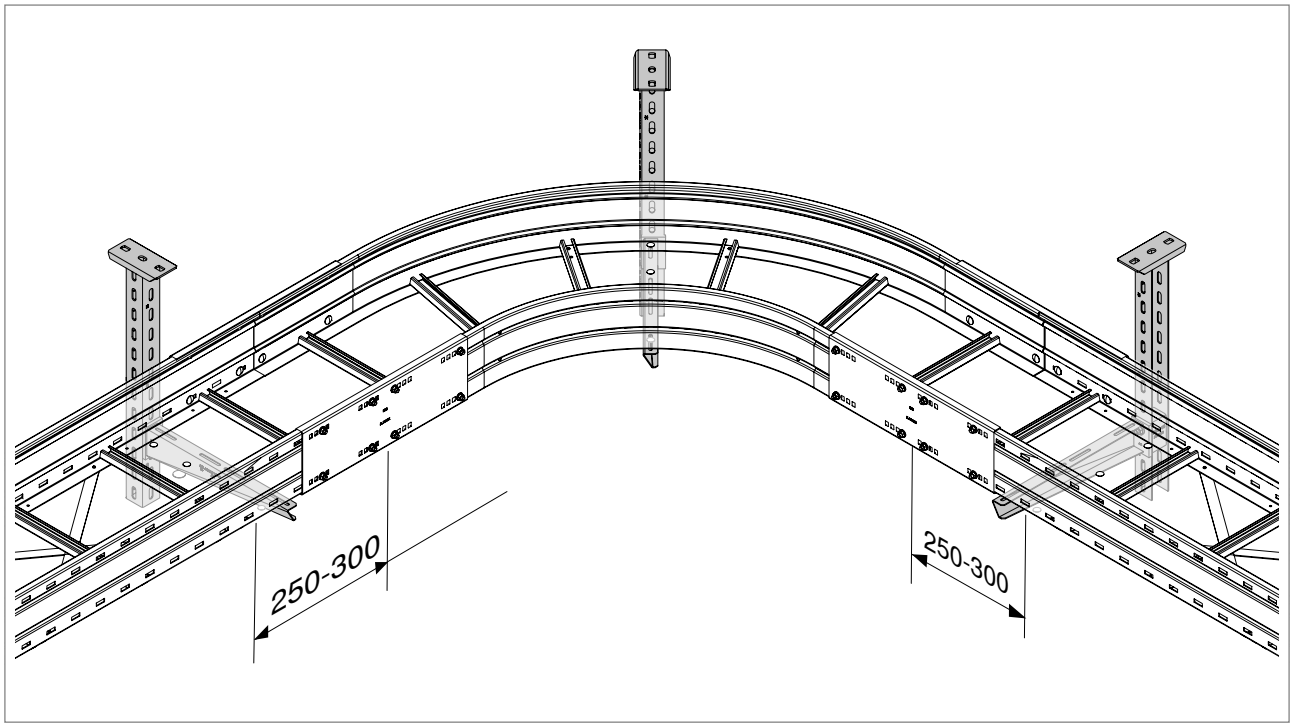

Fig. 36: Example of 90° bend fitting support with 400 mm width

1. Support the fitting with a support structure at a distance of 250–300 mm from the edge.

2. Mount an additional support element under the fitting.

5.4.2 Mounting a WRB 90 90° bend

90° changes of direction are created with the WRB 90 bend. The bend is used for 110, 160 and 200 mm ladder heights and mounted with the WRVL straight connector, or WRV for the 200 mm ladder height. The connector is screwed on with FRS M8 truss-head bolts and combination nuts.

WRB 90 bend, 110/160 mm side height

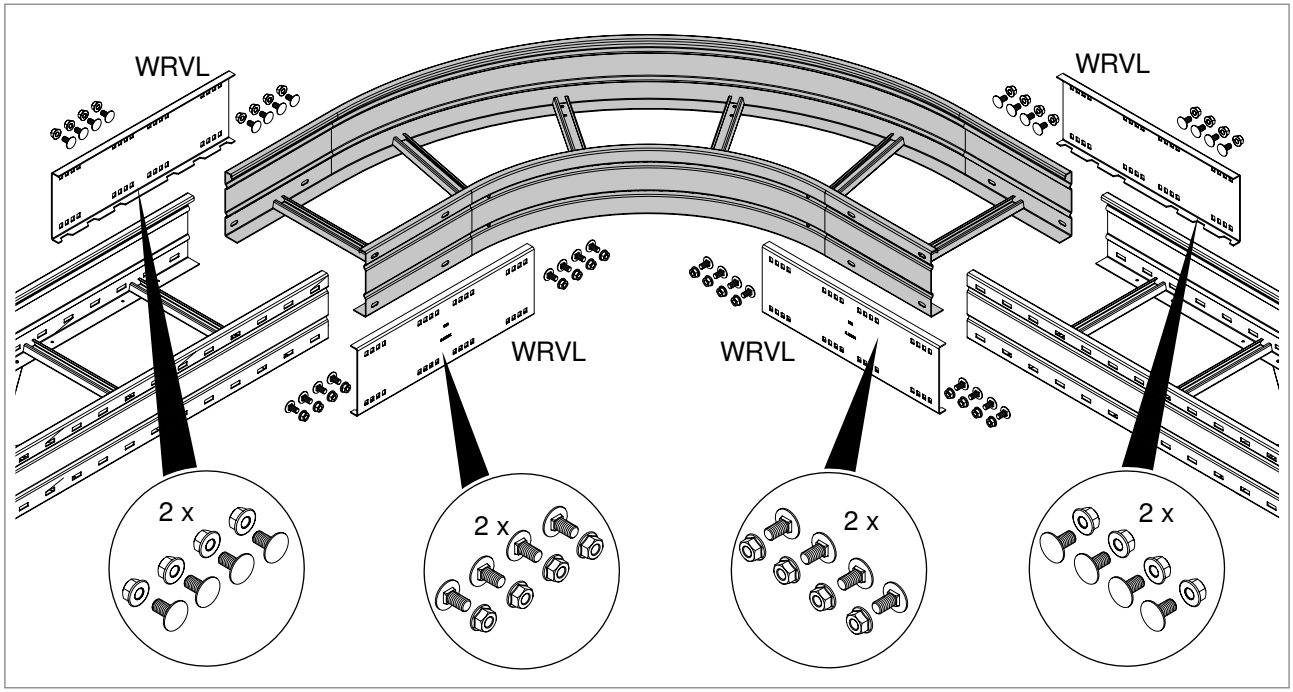

Fig. 37: Components for mounting the 90° bend with 160 mm side height

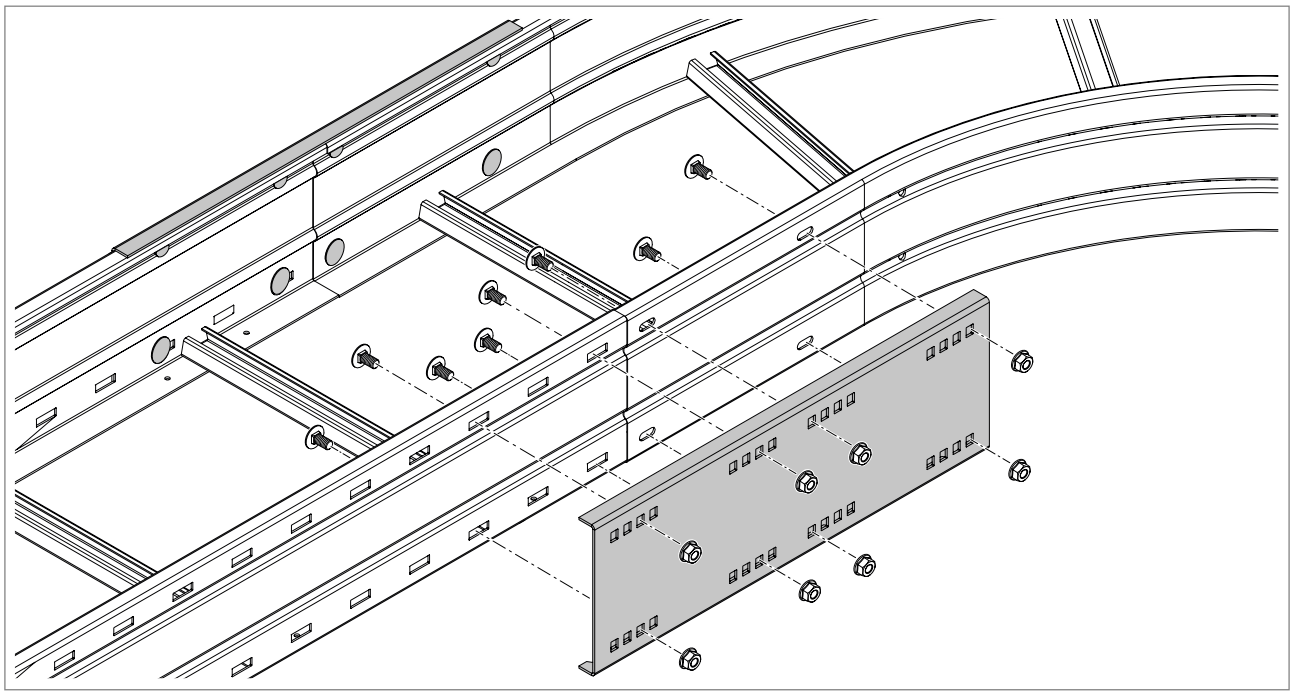

Fig. 38: Screwing on connectors

1. Apply the WRVL straight connectors to the outer sides of the rail in the area of the joints.

2. Screw on the straight connector.

WRB 90 bend, 200 mm side height

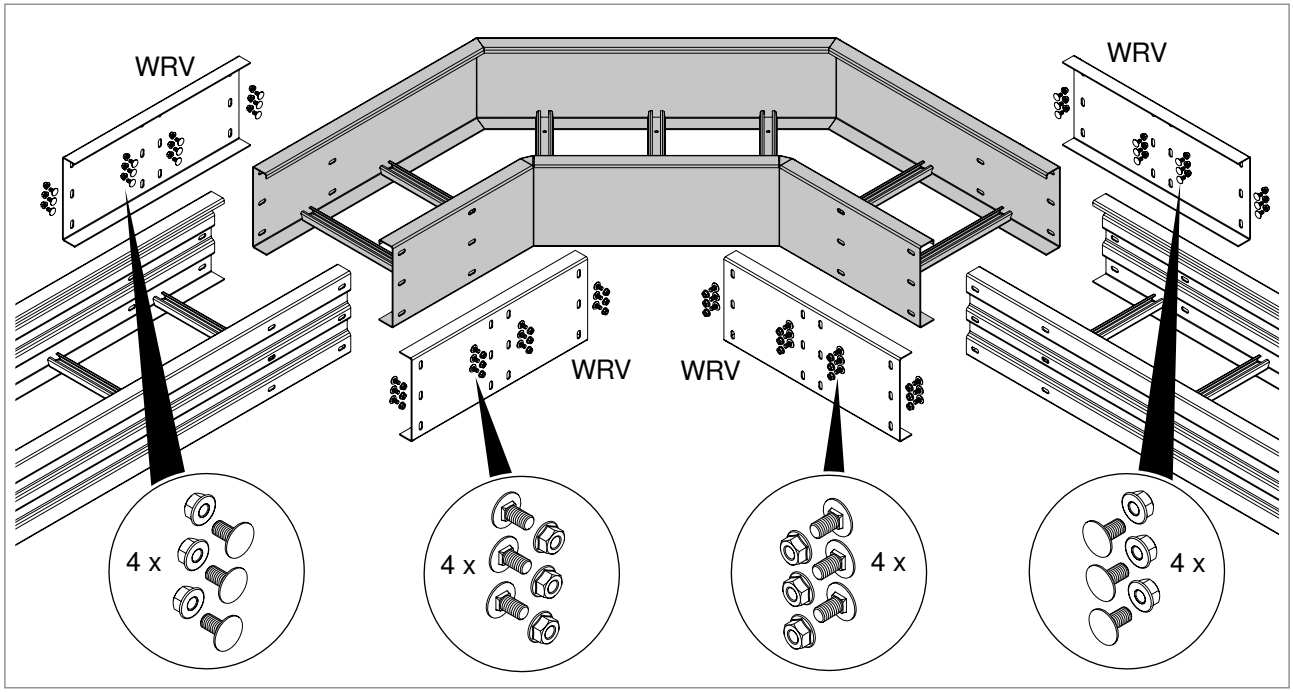

Fig. 39: Components for mounting the 90° bend with 200 mm side height

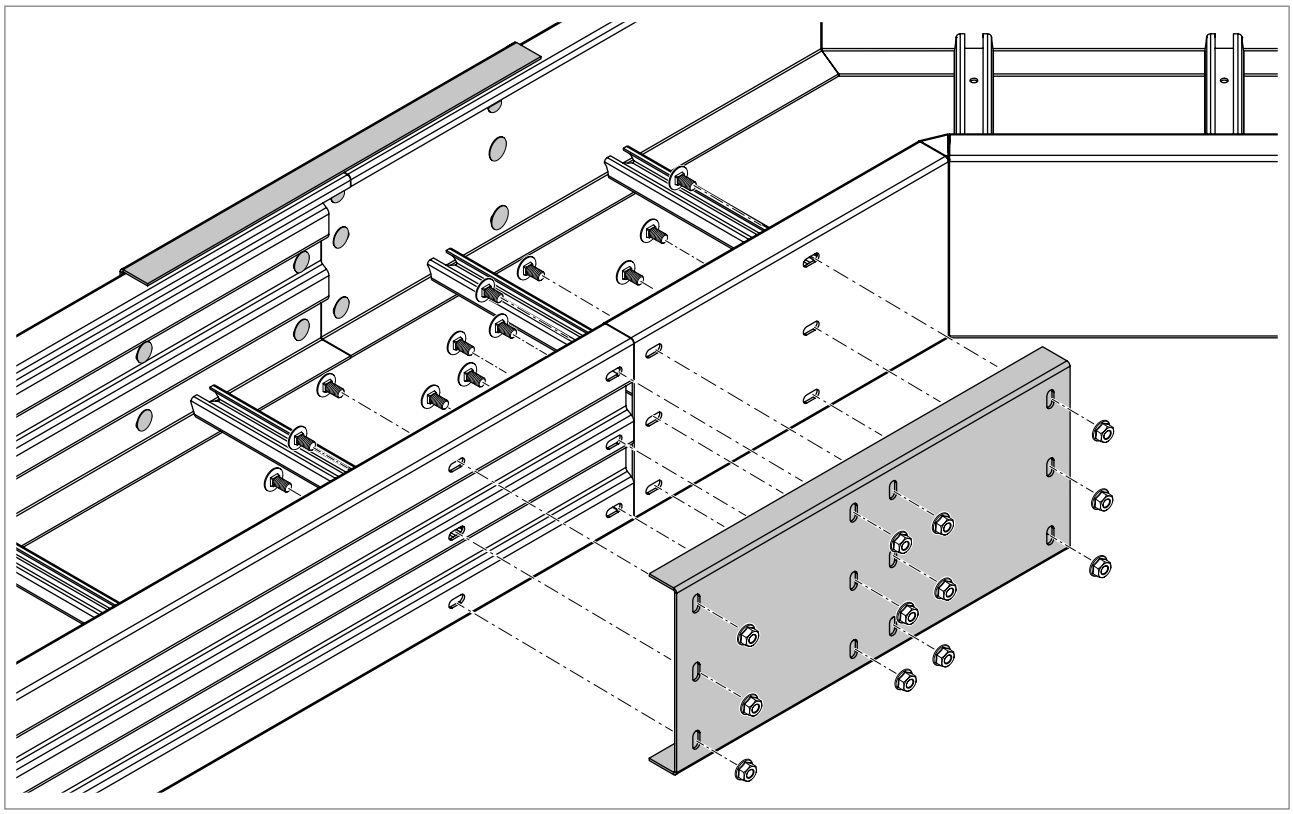

Fig. 40: Screwing on connectors

1. Apply the WRV straight connectors to the outer sides of the rail in the area of the joints.

2. Screw on the straight connector.

5.4.3 Mounting a WLBF 90 falling 90° vertical bend

Vertically falling 90° changes of direction are created with the WLBF 90 bend. The bend is used for the 160 mm ladder height and mounted with the WRVL straight connector. The connector is screwed on with FRS M8 truss-head bolts and combination nuts.

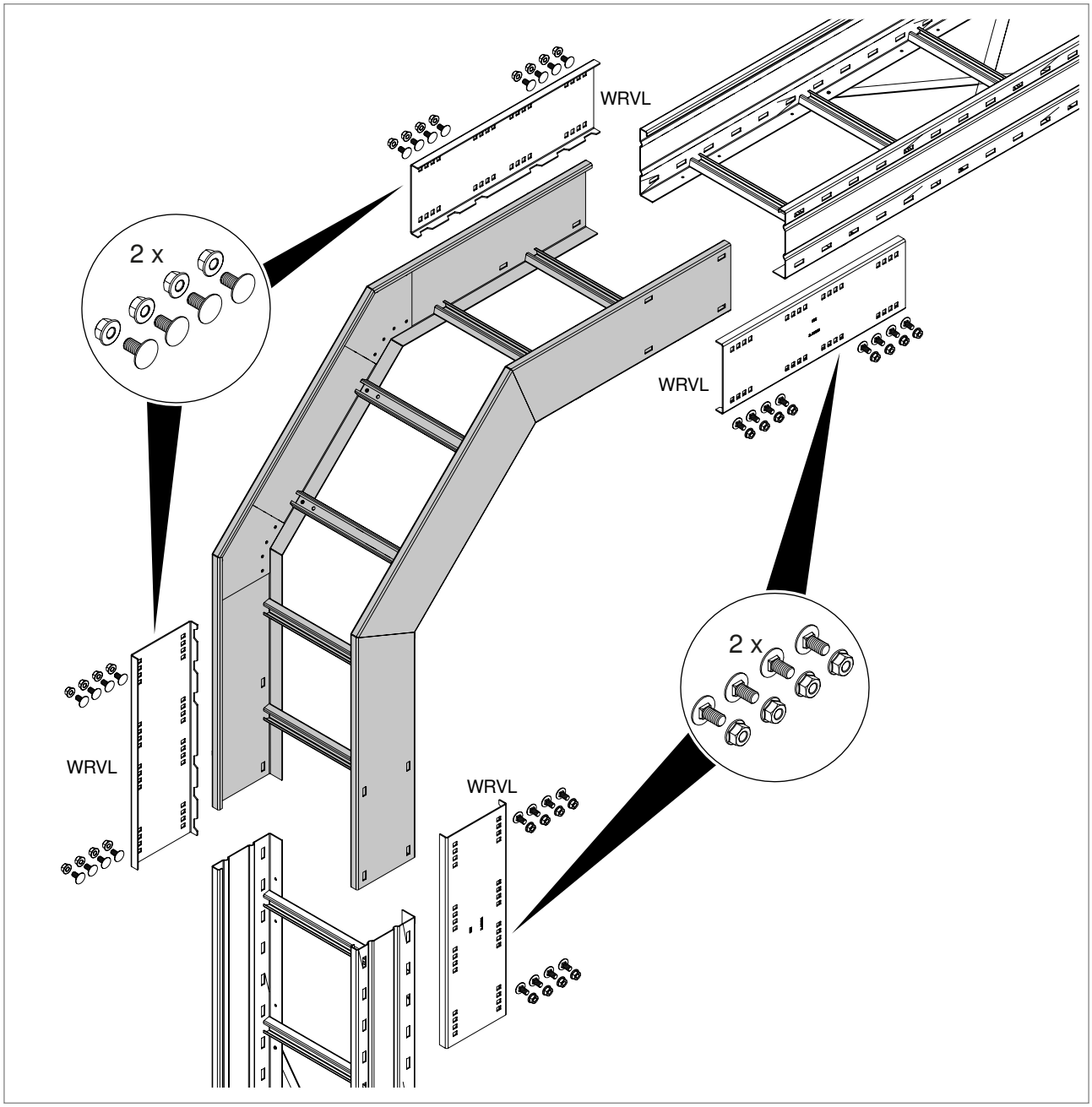

Fig. 41: Components for the mounting of falling vertical bend

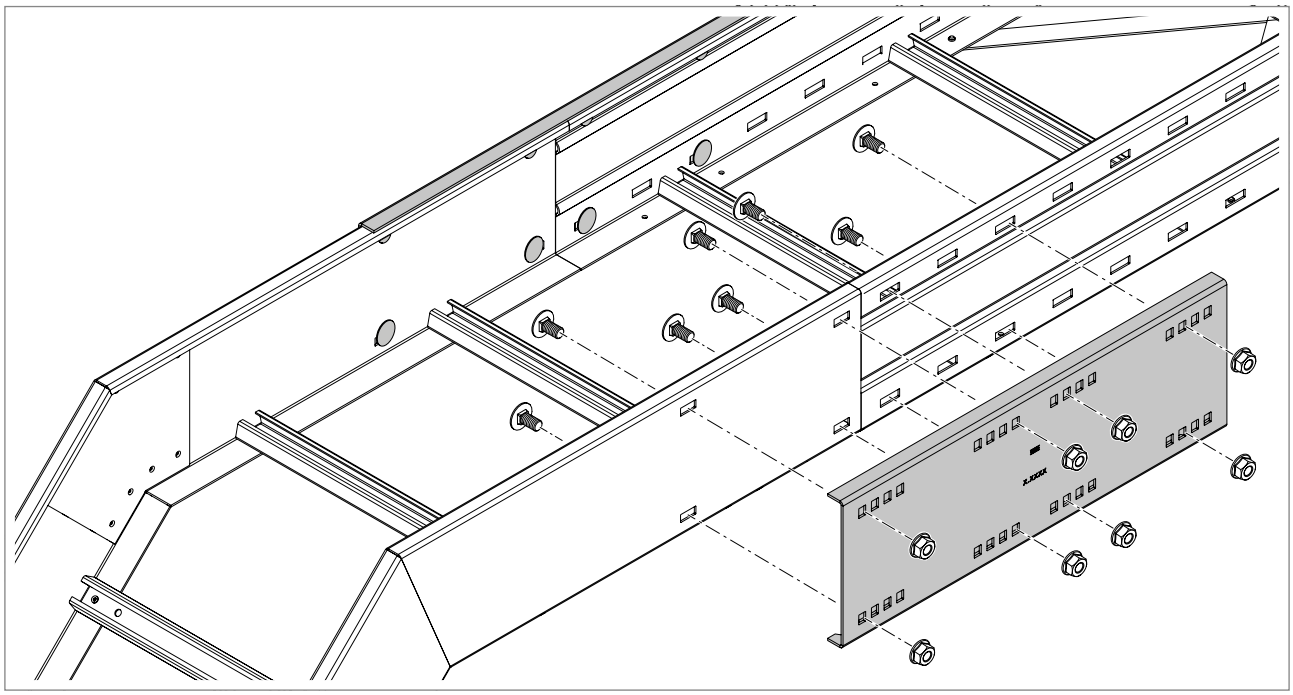

Fig. 42: Screwing on the horizontal WRVL straight connector

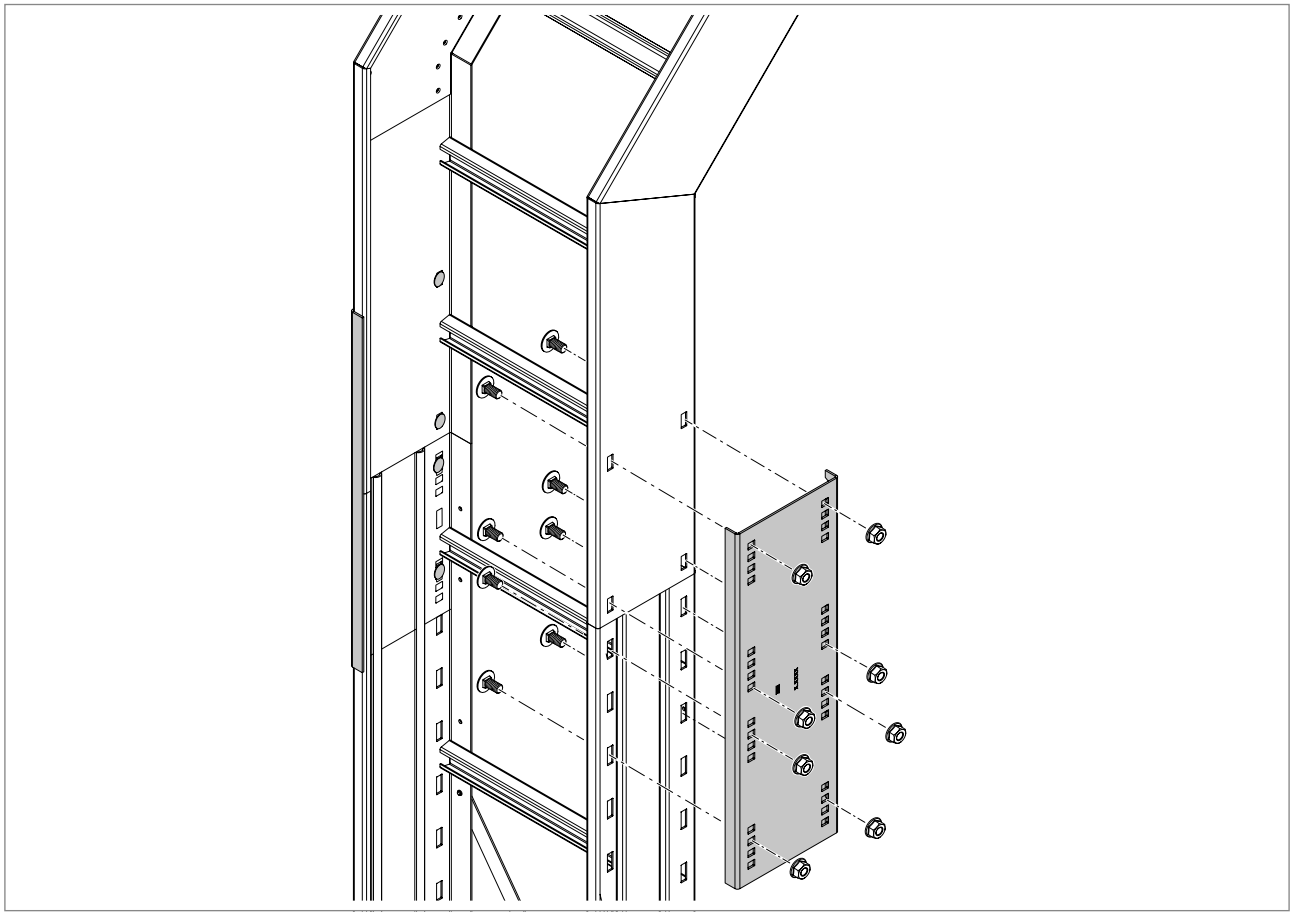

Fig. 43: Screwing on the vertical WRVL straight connector

1. Apply the WRVL straight connectors to the outer sides of the rail in the area of the joints.

2. Screw on the vertical and horizontal straight connectors.

5.4.4 Mounting a WLBS 90 rising 90° vertical bend

Vertically rising 90° changes of direction are created with the WLBS 90 bend. The bend is used for the 160 mm ladder height and mounted with the WRVL straight connector. The connector is screwed on with FRS M8 truss-head bolts and combination nuts.

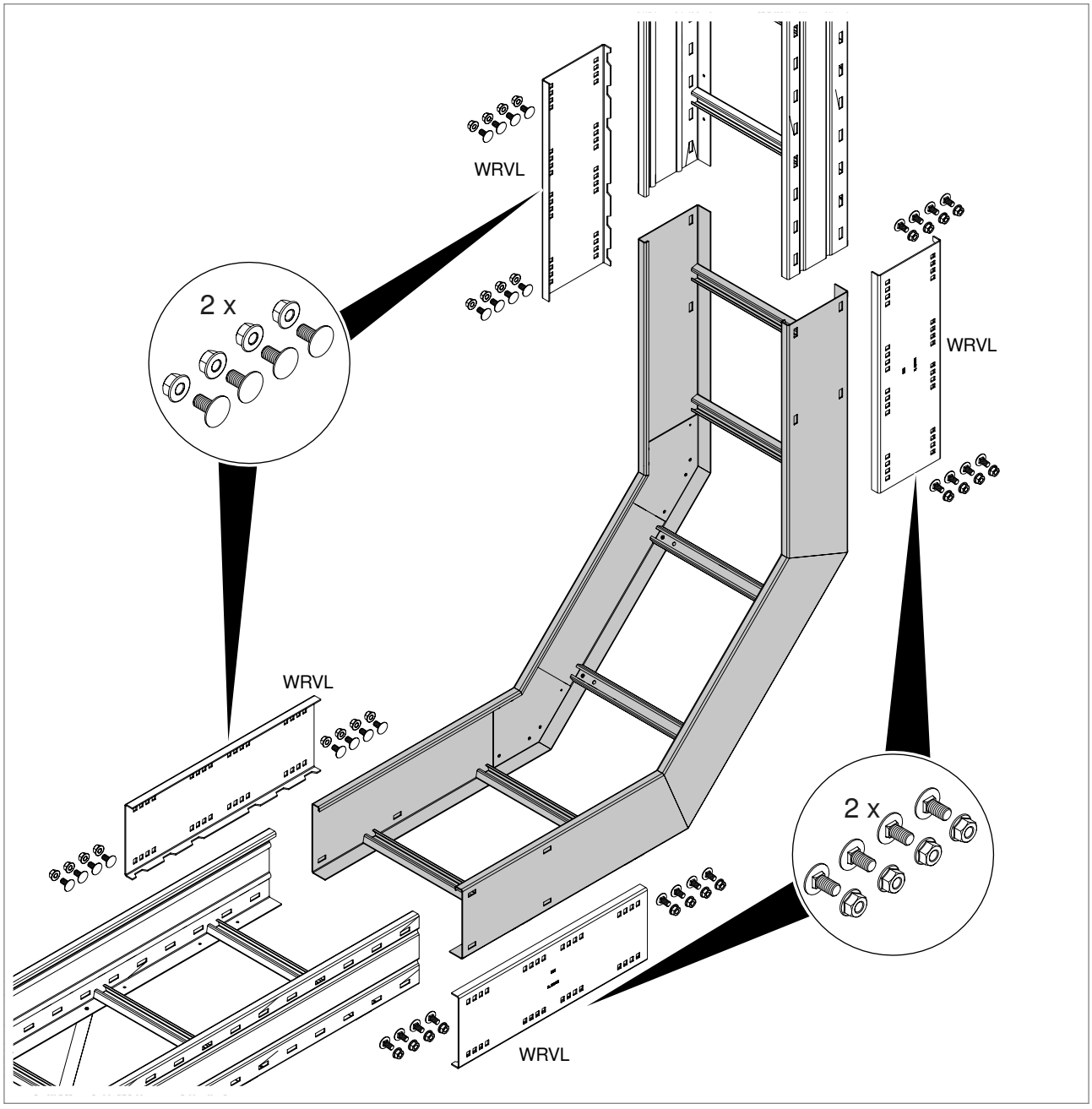

Fig. 44: Components for the mounting of rising vertical bend

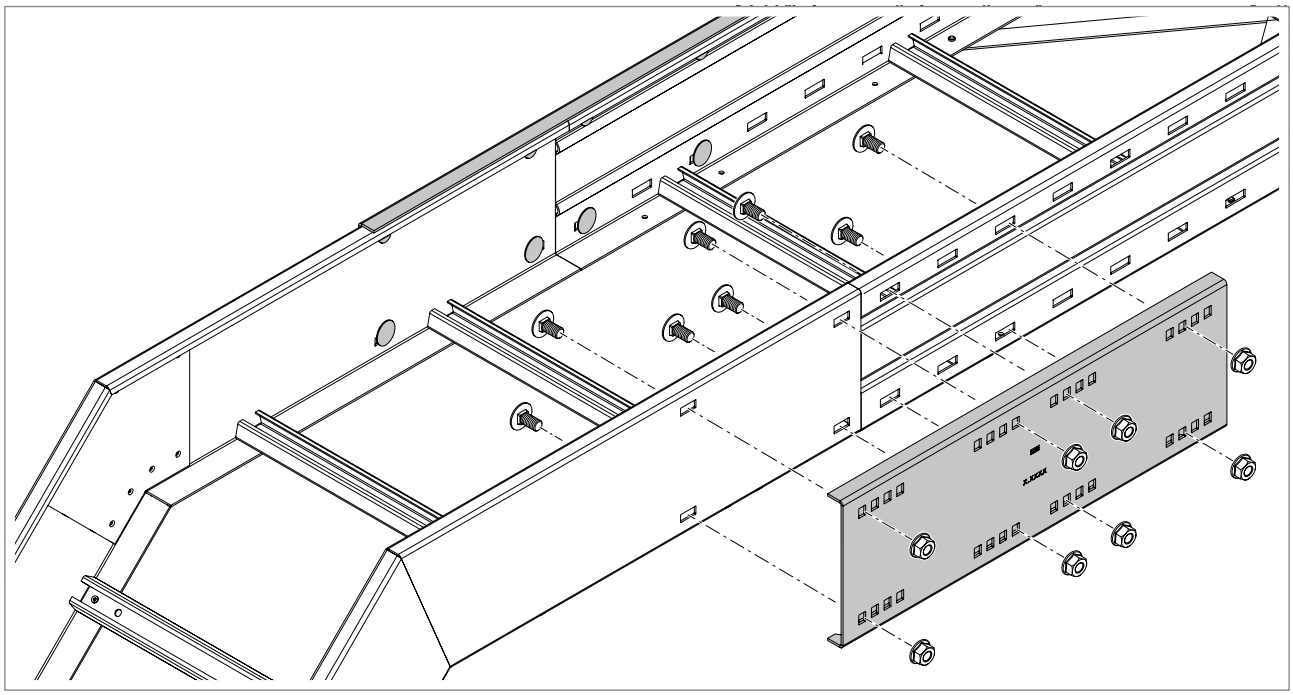

Fig. 45: Screwing on the horizontal WRVL straight connector

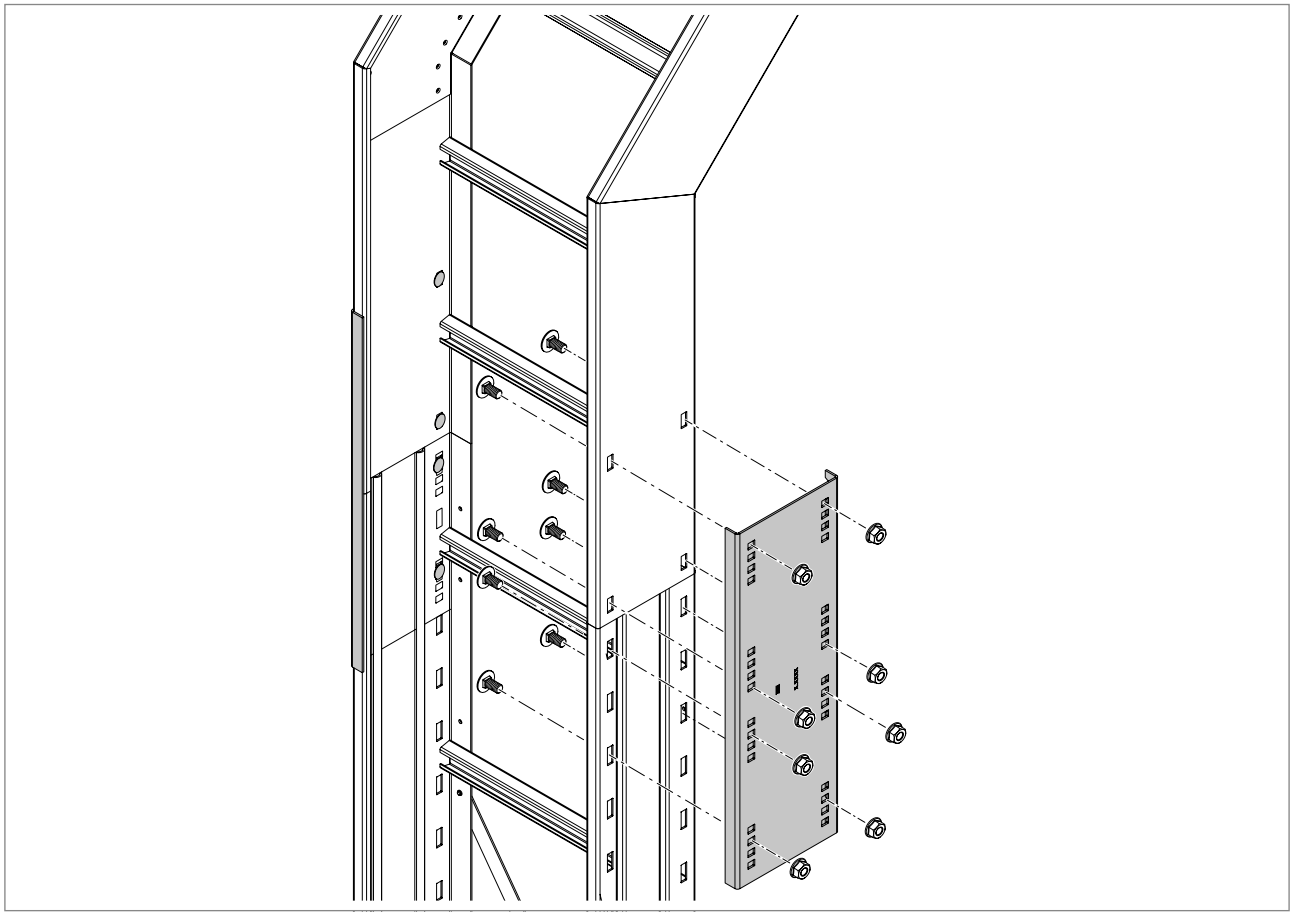

Fig. 46: Screwing on the vertical WRVL straight connector

1. Apply the WRVL straight connectors to the outer sides of the rail in the area of the joints.

2. Screw on the vertical and horizontal straight connectors.

5.4.5 Mounting a WLT T branch piece

Horizontal T branches are created using the WLT T branch piece. The T branch piece is used for ladder heights 110, 160 and 200 mm and mounted with the WRVL straight connector, or WRV for the 200 mm ladder height. The connector is screwed on with FRS M8 truss-head bolts and combination nuts.

WLT T branch piece, 110/160 mm side height

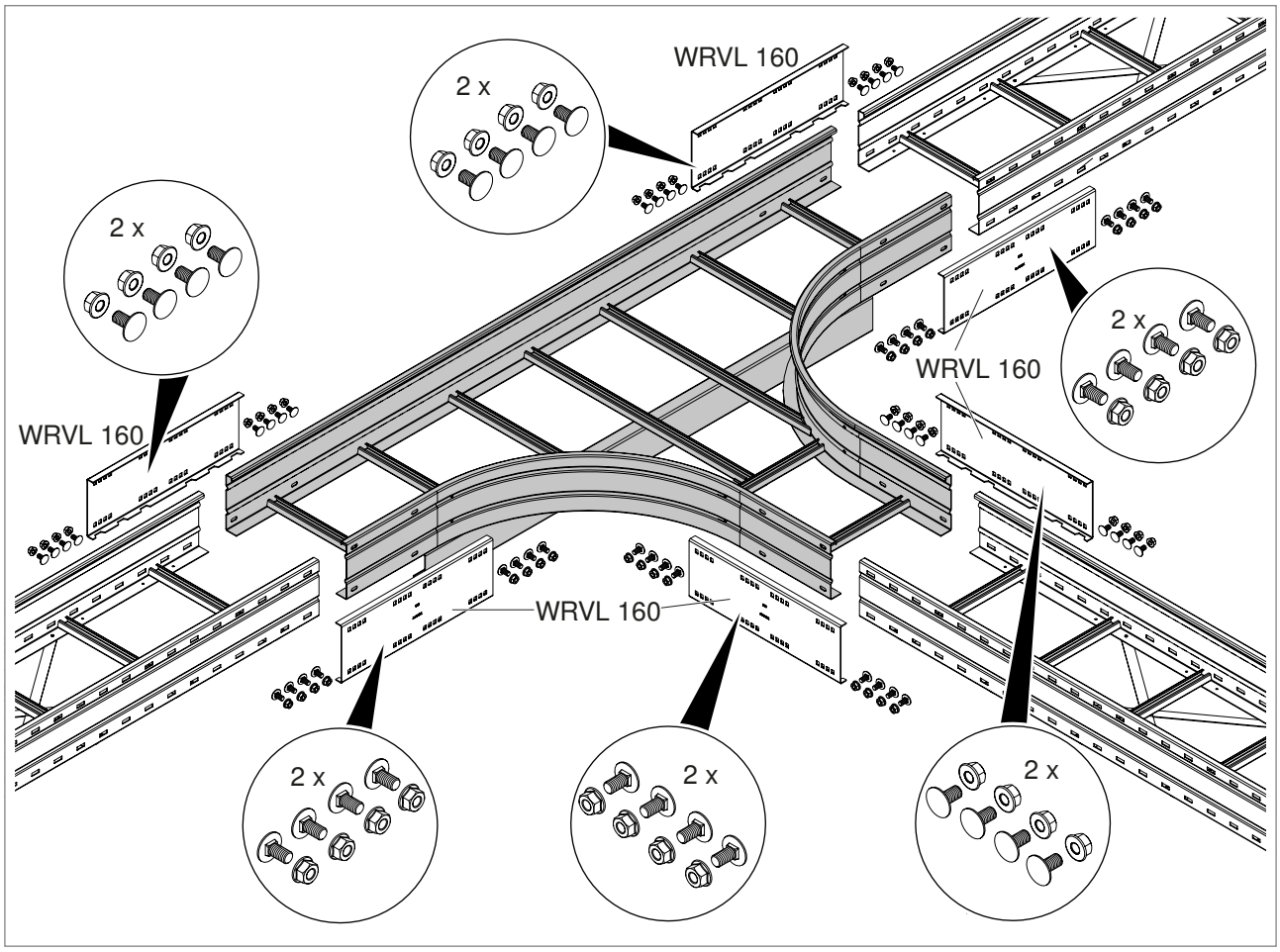

Fig. 47: Components for mounting T branch pieces

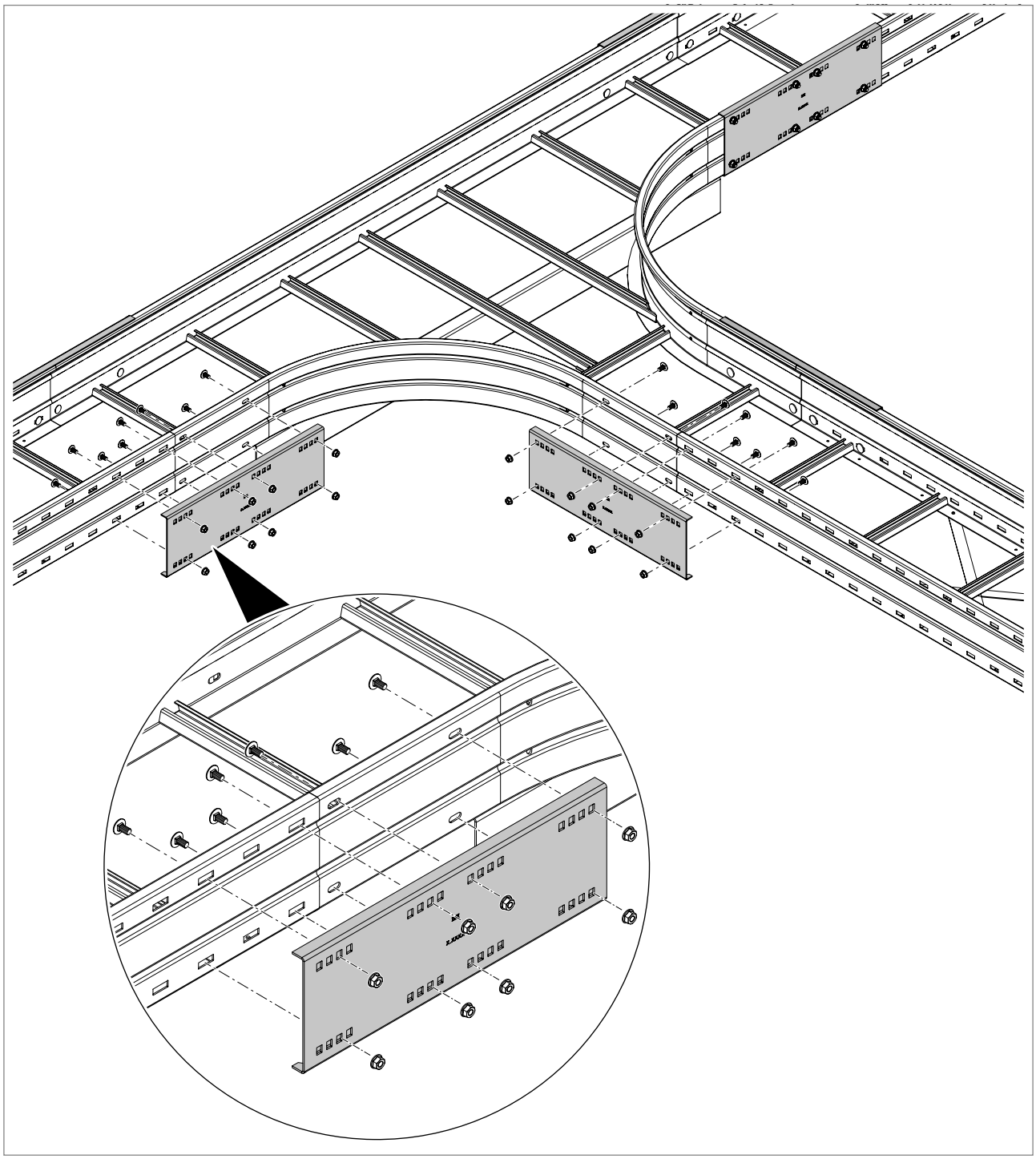

Fig. 48: Screwing on the WRVL straight connector

1. Apply the WRVL straight connectors to the outer sides of the rail in the area of the joints.

2. Screw on the straight connector.

WLT T branch piece, 200 mm side height

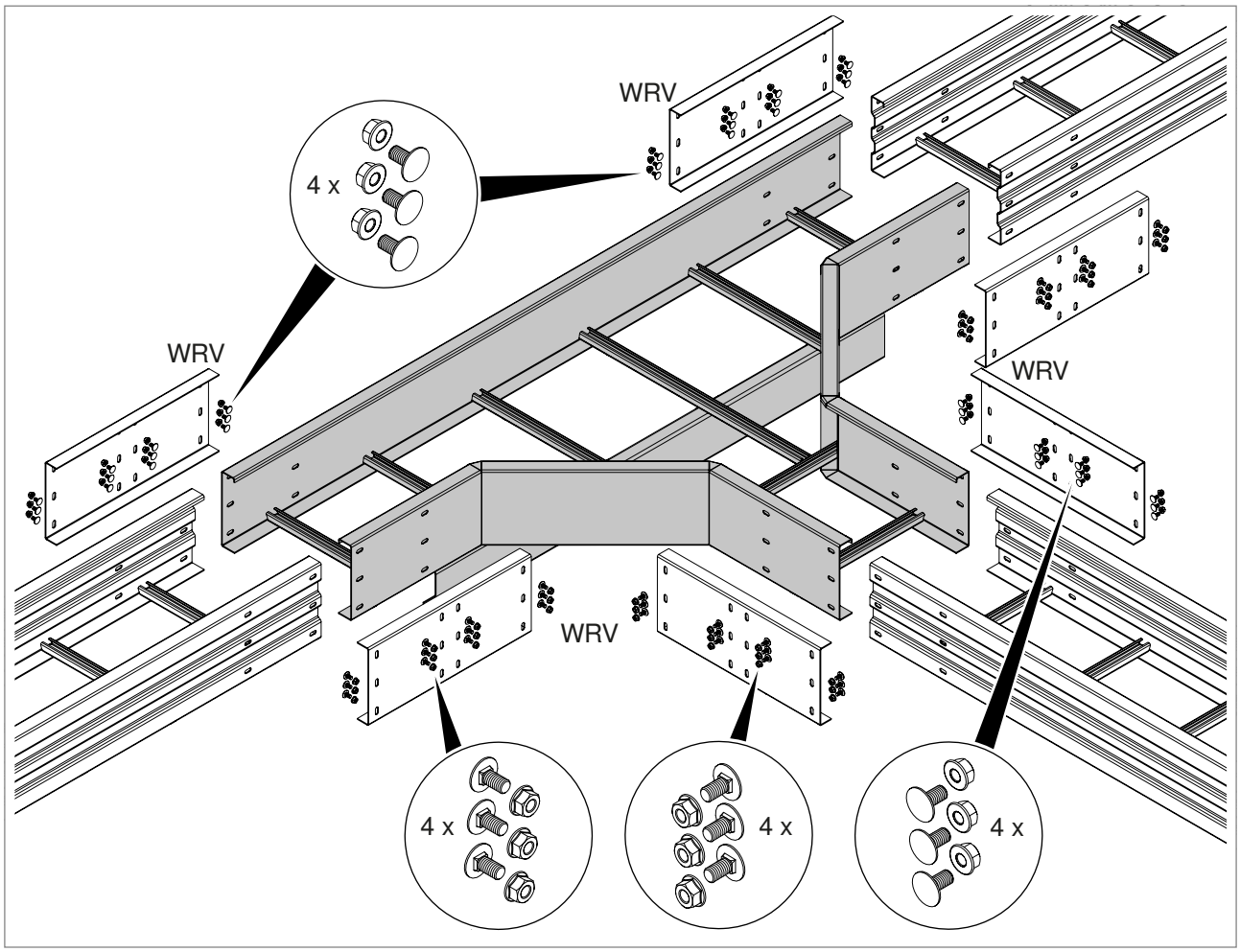

Fig. 49: Components for mounting T branch pieces, 200 mm side height

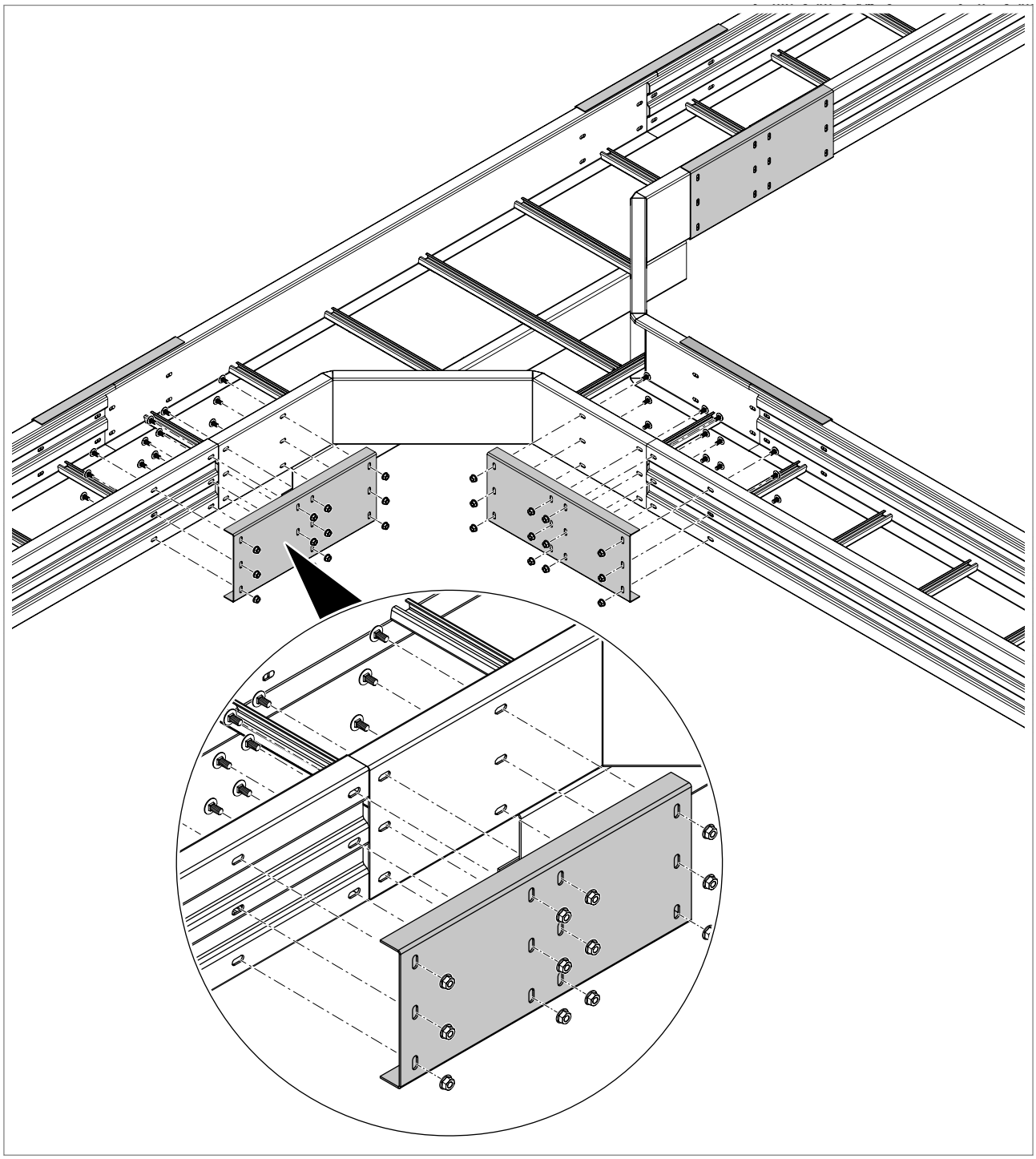

Fig. 50: Screwing on the WRV straight connector

1. Apply the WRV straight connectors to the outer sides of the rail in the area of the joints.

2. Screw on the straight connector.

5.4.6 Mounting an add-on tee

Horizontal T branches are created using the WRAA add-on tee. The add-on tee is used for the 110 and 160 mm ladder height and mounted with the WRVL straight connector. The connector is screwed on with FRS M8 truss-head bolts and combination nuts. A CM3015 profile rail is mounted as edge protection.

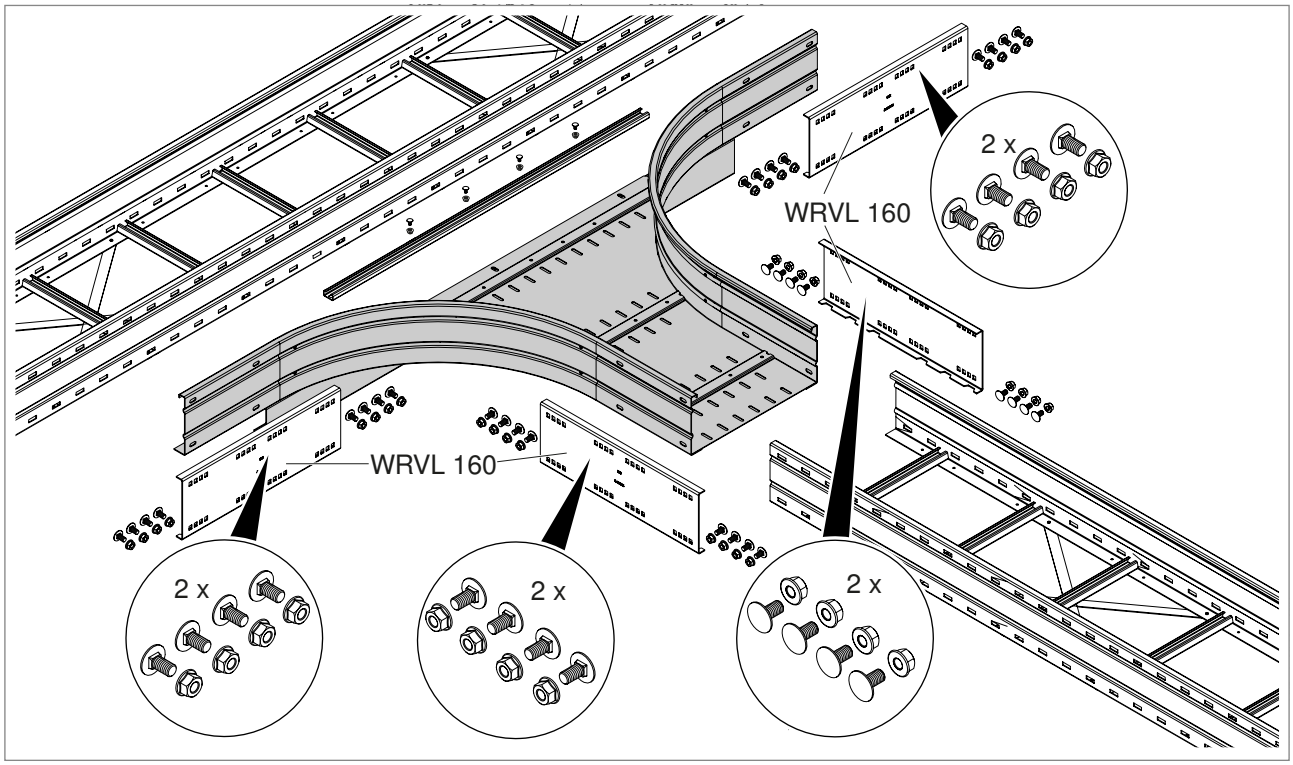

Fig. 51: Components for the mounting of an add-on tee

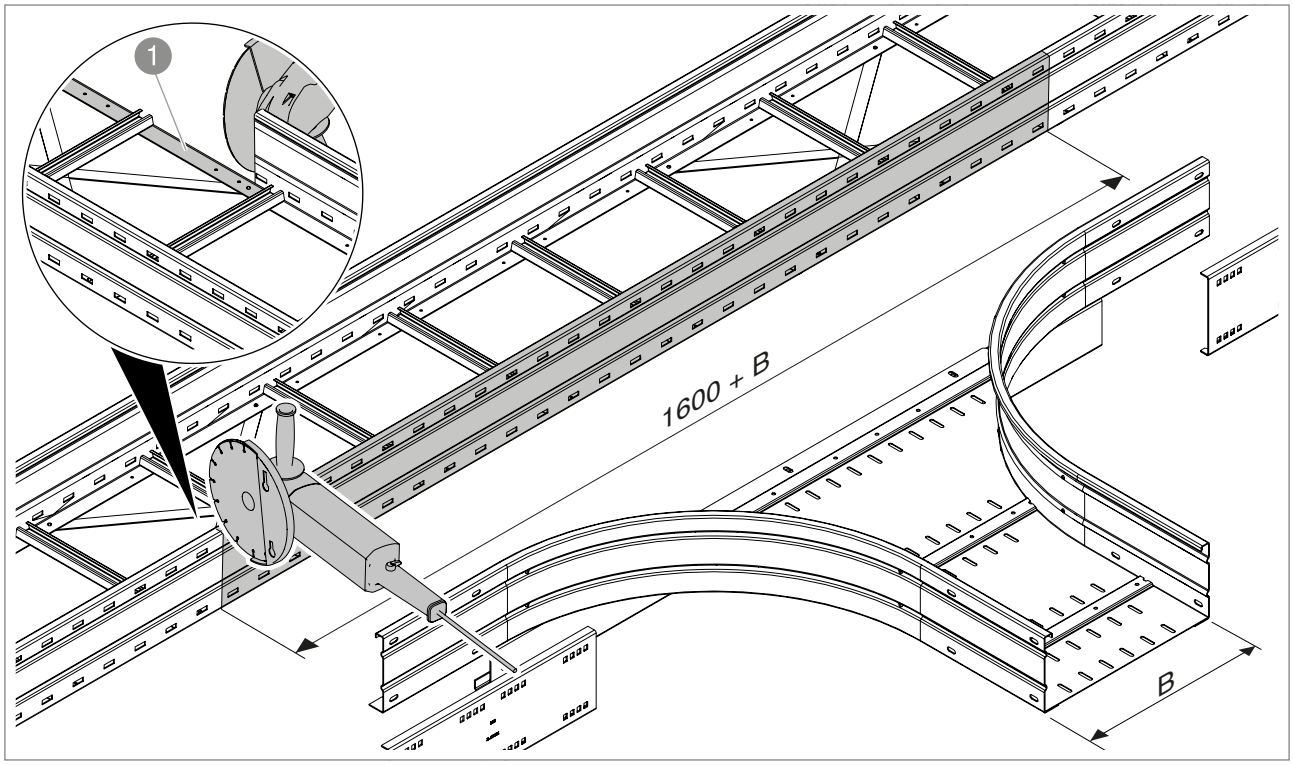

Fig. 52: Notching out the rail

1. Notch out the rail of the ladder with the dimension 1,600 mm + B, whilst leaving the rail underbelt ❶ as a support for the rungs.

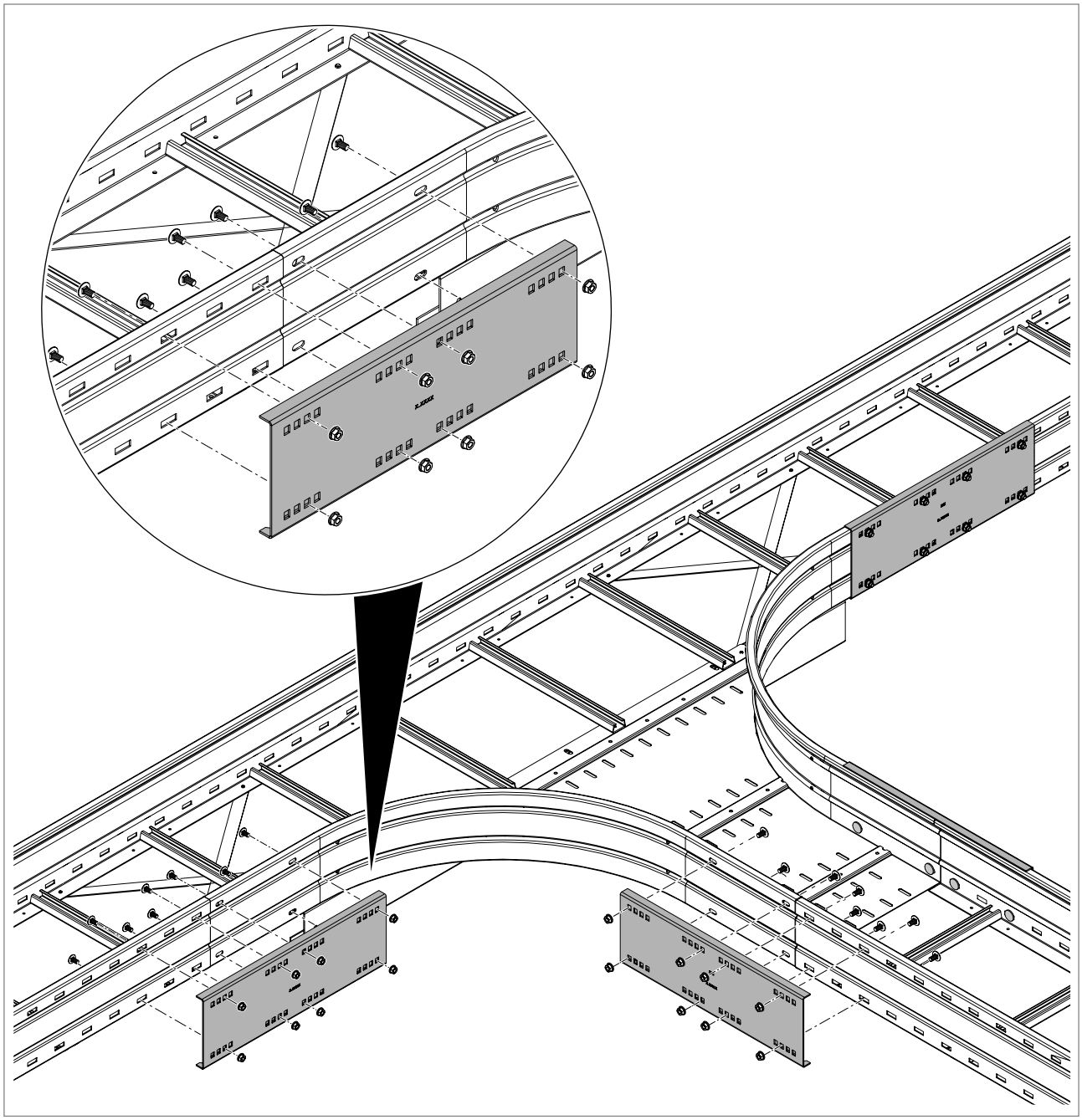

Fig. 53: Screwing on the straight connector

2. Apply the WRVL straight connectors to the outer sides of the rail in the area of the joints.

3. Screw on the straight connector.

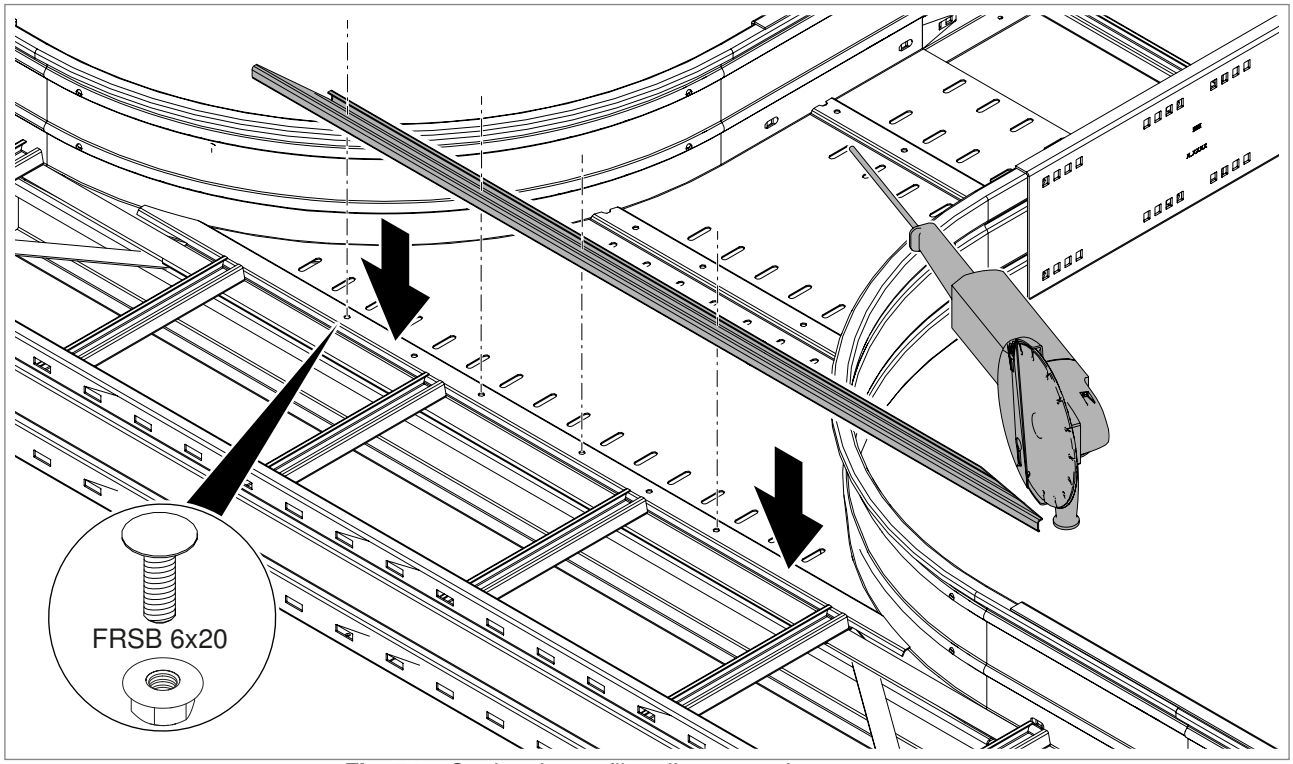

Fig. 54: Cutting the profile rail at an angle

4. Cutting the CM3015 profile rail at an angle in the bend area.

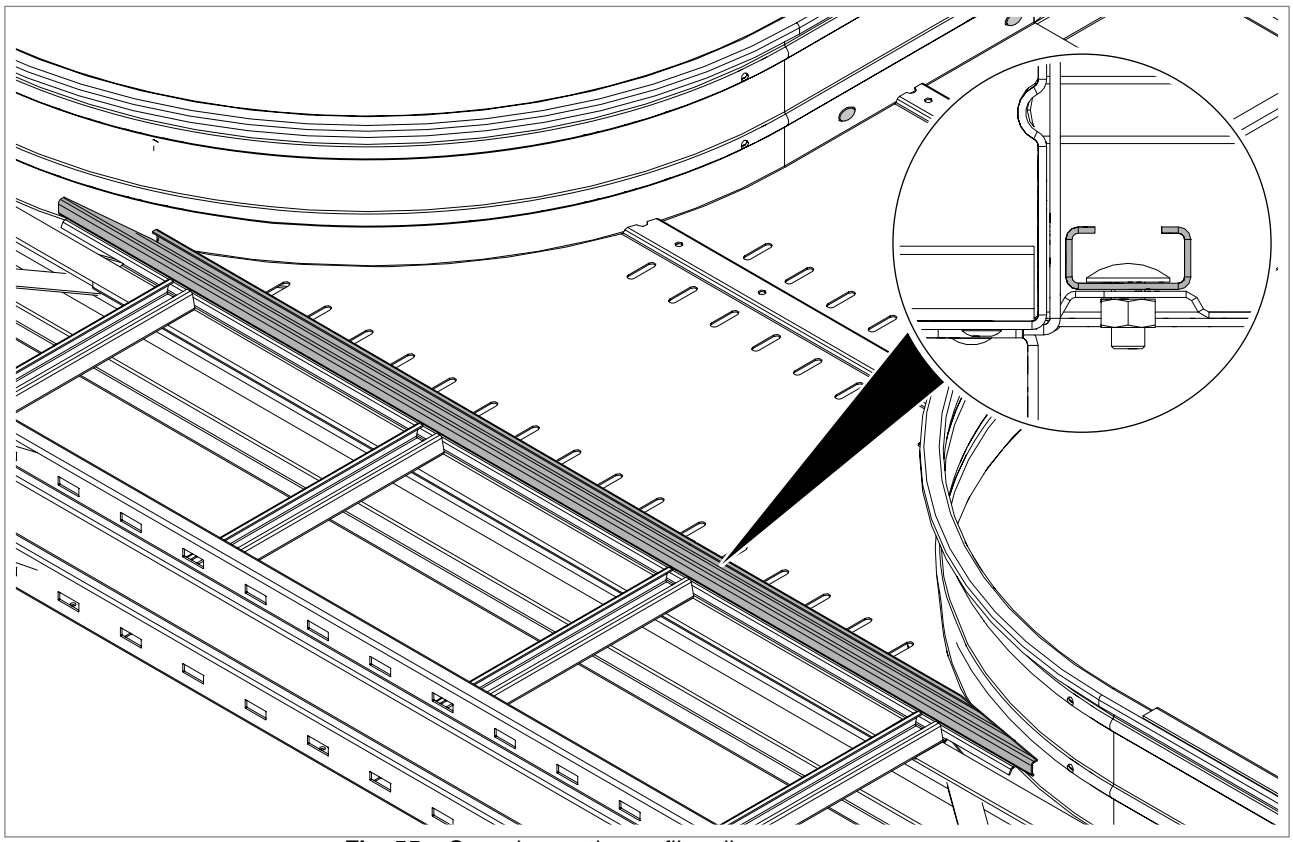

Fig. 55: Screwing on the profile rail

5. Screw the profile rail to the beading of the add-on tee with FRS 6x20 bolts and combination nuts.

5.4.7 Mounting a WLK cross-over

Horizontal 90° branches are created in all four directions using the WLK cross-over. The cross-over is used for the 110 mm ladder height and mounted with the WRVL straight connector. The connector is screwed on with FRS M8 truss-head bolts and combination nuts.

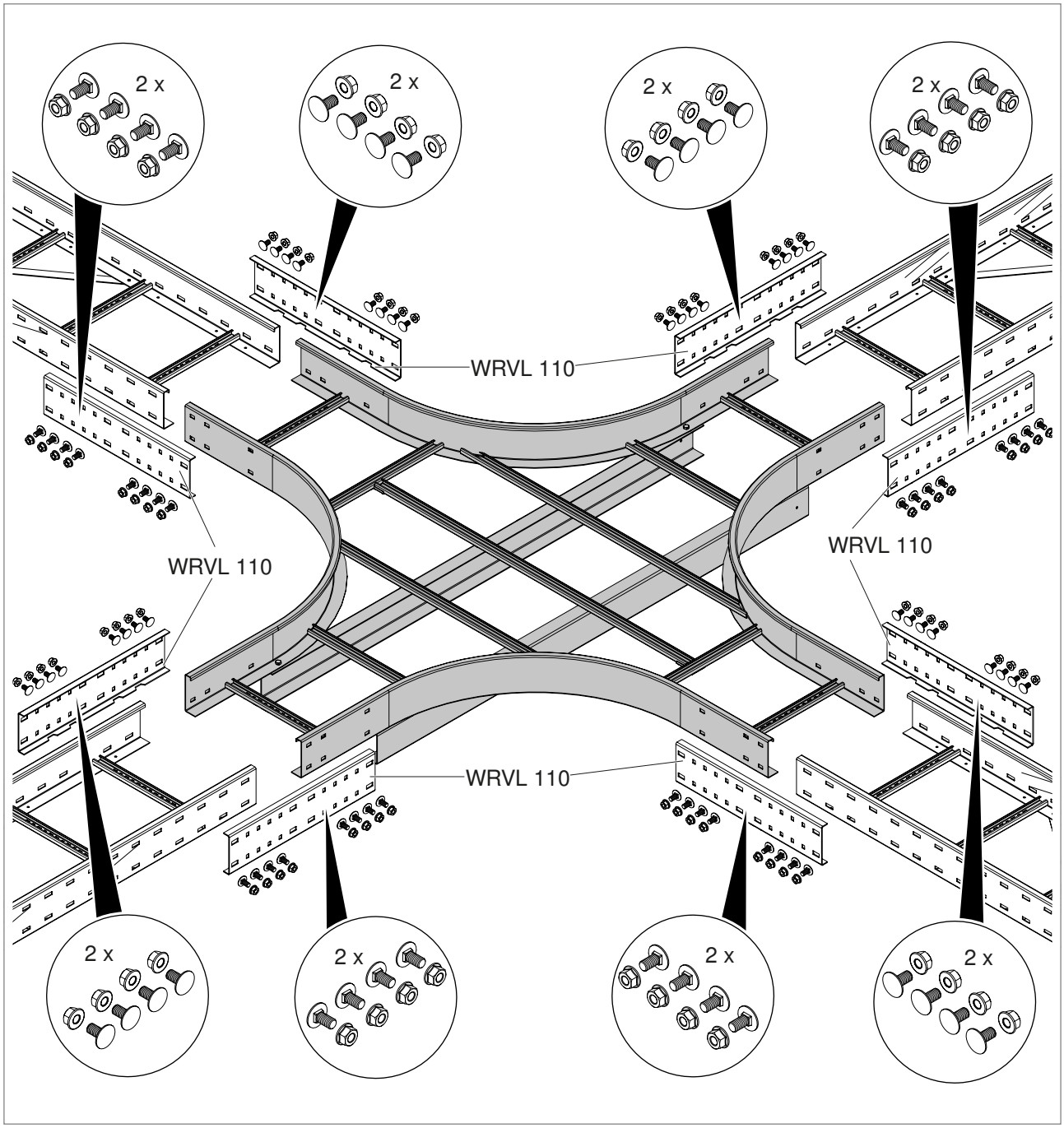

Fig. 56: Components for mounting a cross-over

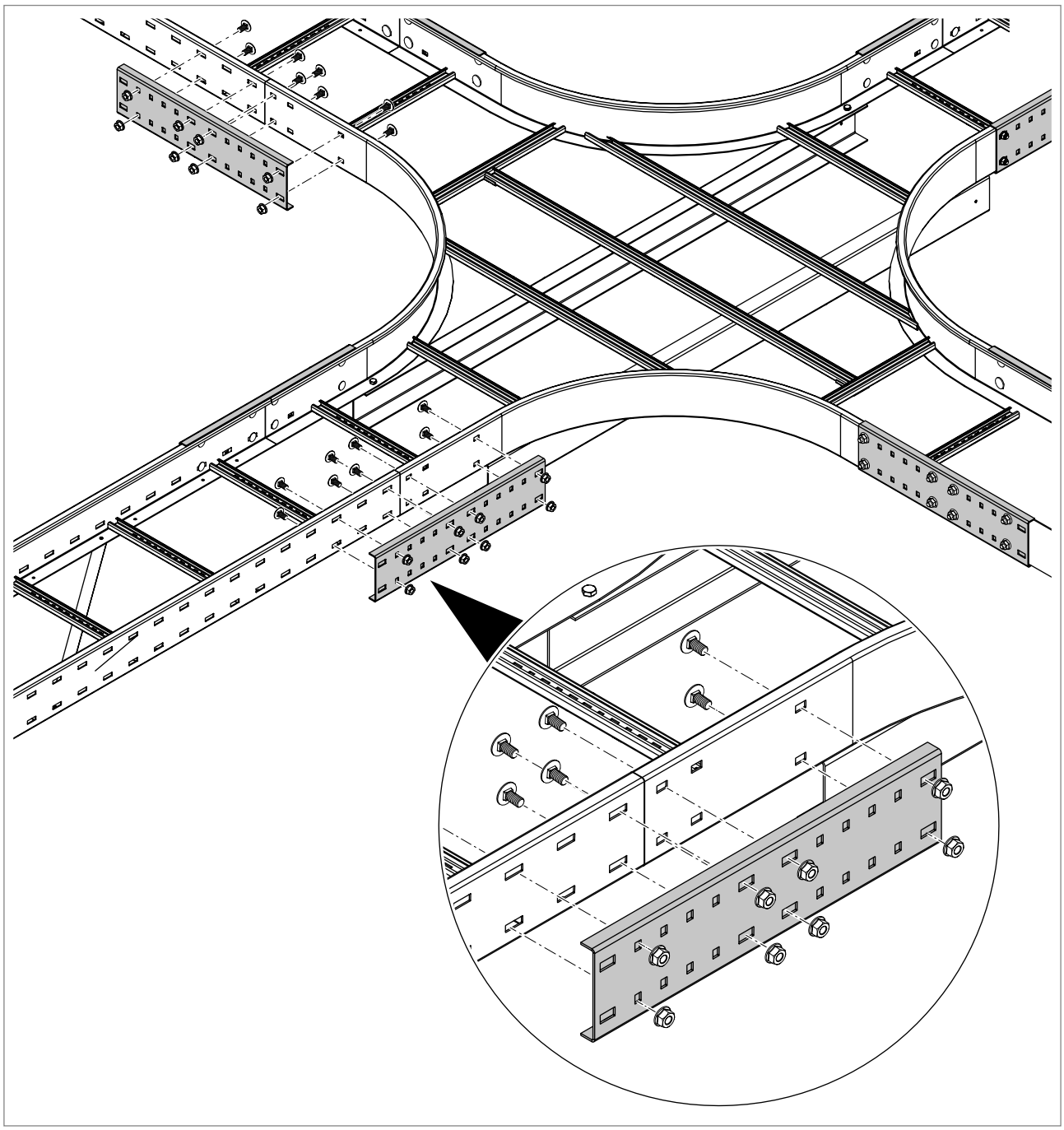

Fig. 57: Screwing on the WRVL straight connector

1. Apply the WRVL straight connectors to the outer sides of the rail in the area of the joints.

2. Screw on the straight connector.

5.5 Mounting covers

ATTENTION

Risk of damage!
Screws can damage cables if the screw points point into the routing space. Select the length of the drilling screws for mounting the cover, so that the inner edge of the rail is not drilled through.

5.5.1 Mounting a cover in the WDRLU DF roof shape

Roof-shaped covers of type WDRLU DF allow a better run-off of water and improved cable ventilation. The cover is used for ladders with the 110 and 160 mm side heights. It is screwed on with self-tapping drilling screws (e.g. 4.2 x 16 mm).

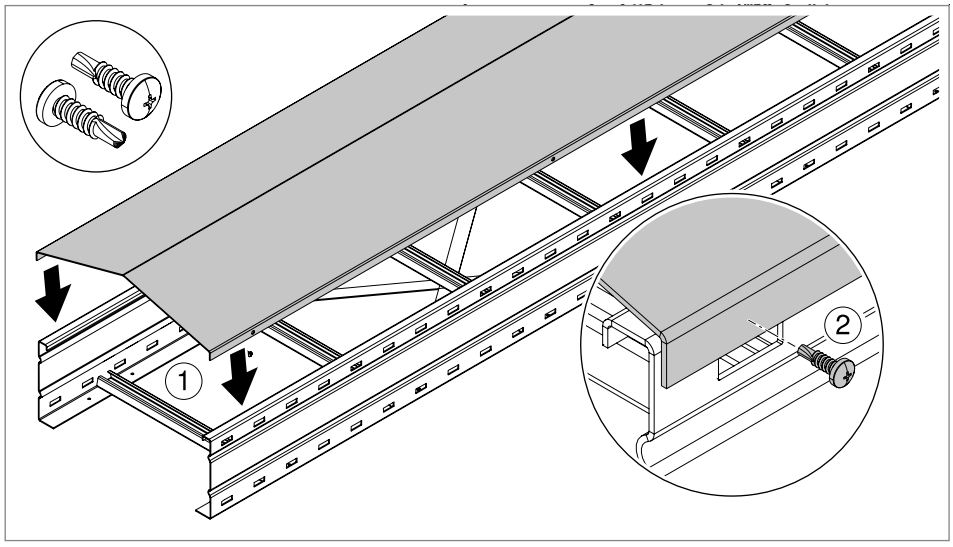

Fig. 58: Place the WDRLU DF cover on the wide span cable ladder

1. Place the cover on the ladder.
2. Screw on the cover with self-tapping drilling screws.

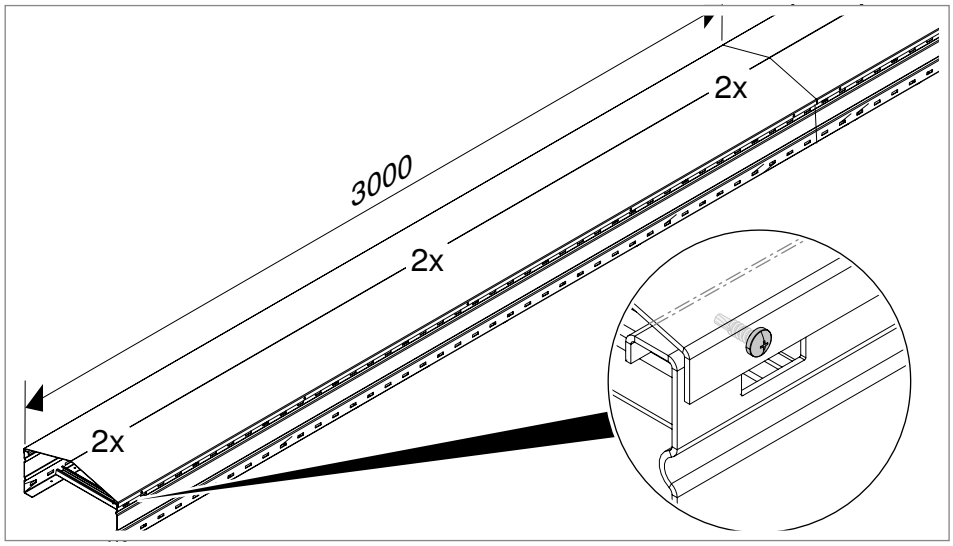

Fig. 59: Screwing on the cover at at least 6 points

3. Screw on at least 3x 2 drilling screws per 3,000 mm of cover length.

5.5.2 Mounting the WDRL and WKLD cover with turn buckle

Covers of type WDRL and WKLF have pre-mounted turn buckles. The type WDRL cover is used for ladders with the 110 and 160 mm side heights, the type WKLD cover is used for the 200 mm side height.

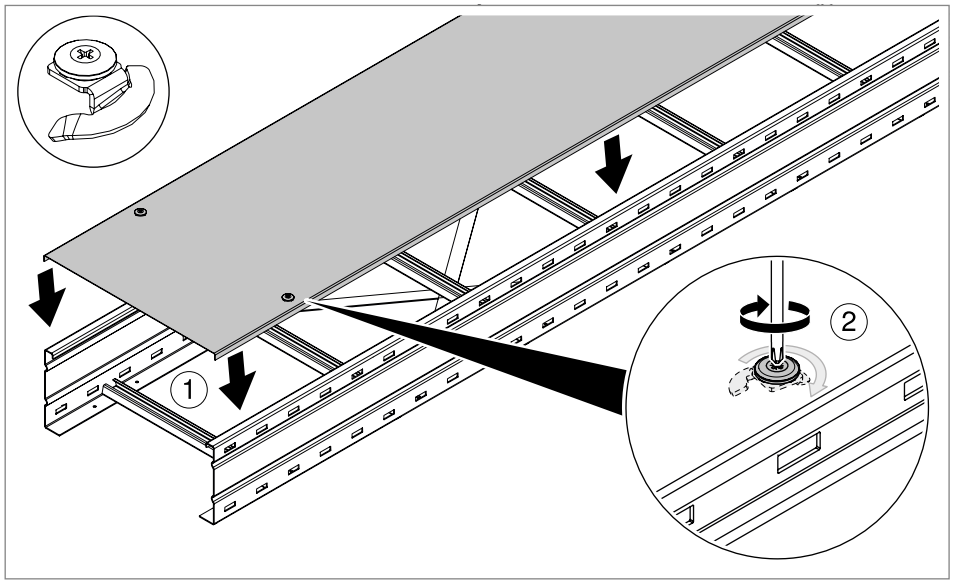

Fig. 60: Applying the WDRL/WKLD cover to the wide span cable ladder

1. Place the cover on the ladder.
2. Screw on the cover with pre-mounted turn buckles.

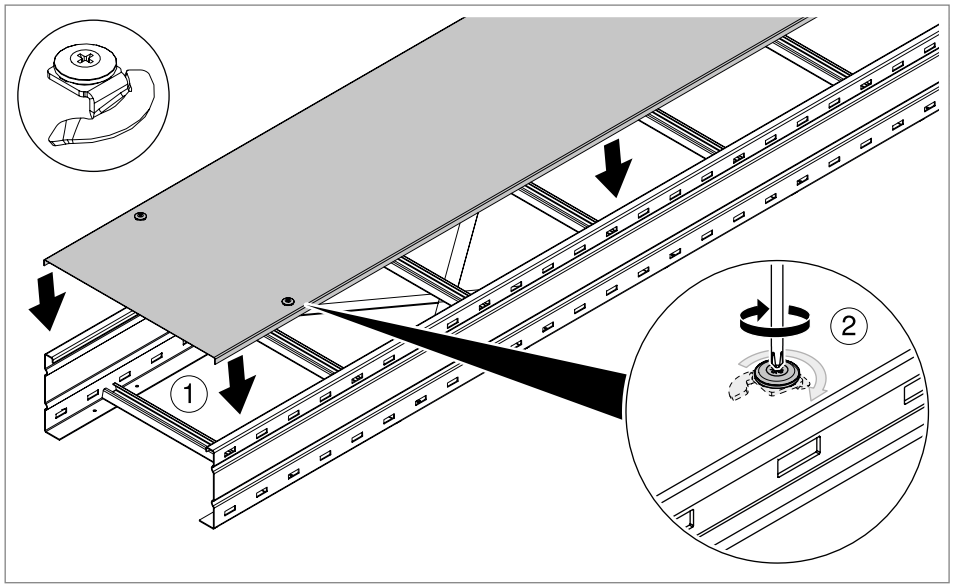

Fig. 61: Mounted cover with pre-mounted turn buckles

3. Turn 6 turn buckles tight for each cover.
4. Mount two covers on 6 metres of cable ladder.

5.5.3 Mounting the DRL FAM cover with spacer

Covers of type DRL FAM are mounted with spacers, in order to guarantee improved ventilation of the routed cables. The cover is used for ladders with the 110 and 160 mm side heights. The cover has predrilled holes to mount spacers.

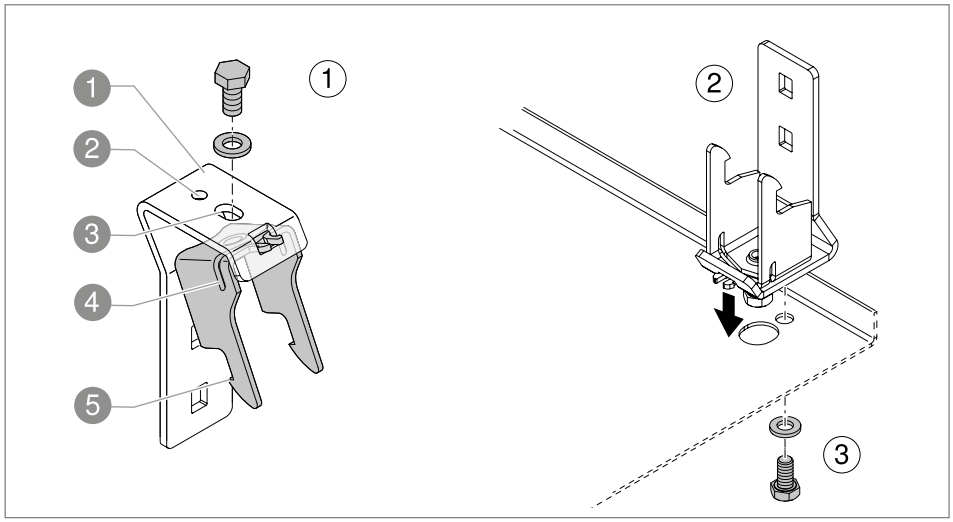

Fig. 62: Mounting spacers on covers

1 Cover holder

2 Round hole for second screw

3 Slot for first screw

4 Cover clamp

5 Hook

1. Insert the cover clamp in the cover holder, screw through the slot with the screw and washer, so that the cover clamp can still be moved fully.

2. Place the spacer on the drill holes on the underside of the cover, so that the first screw is located in the larger drill hole.

3. Fasten the spacer through the round hole on the cover using the second screw and washer.

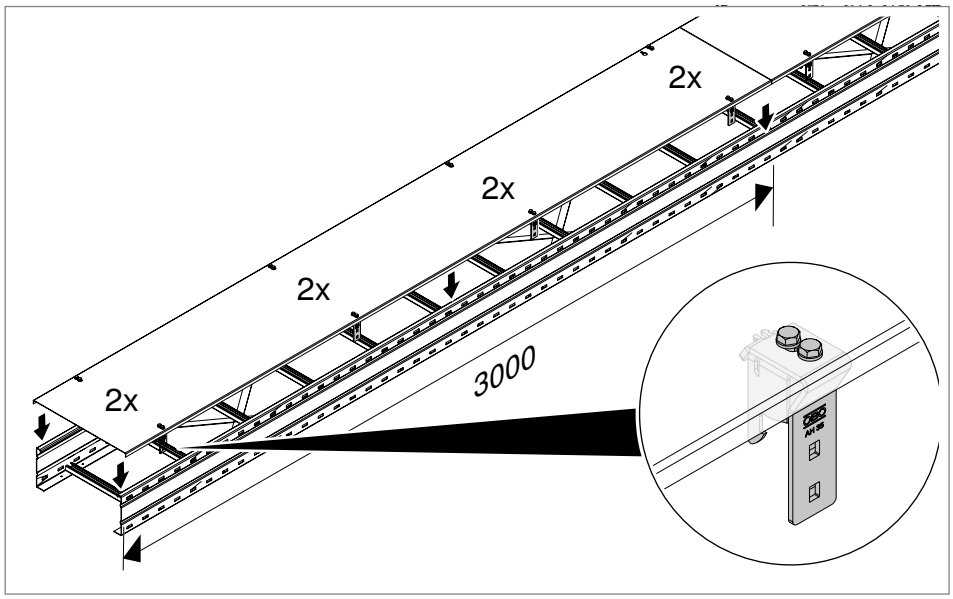

Fig. 63: Mounted spacer on DRL FAM cover

4. Screw on 4x 2 spacers for every 3,000 mm of cover length.

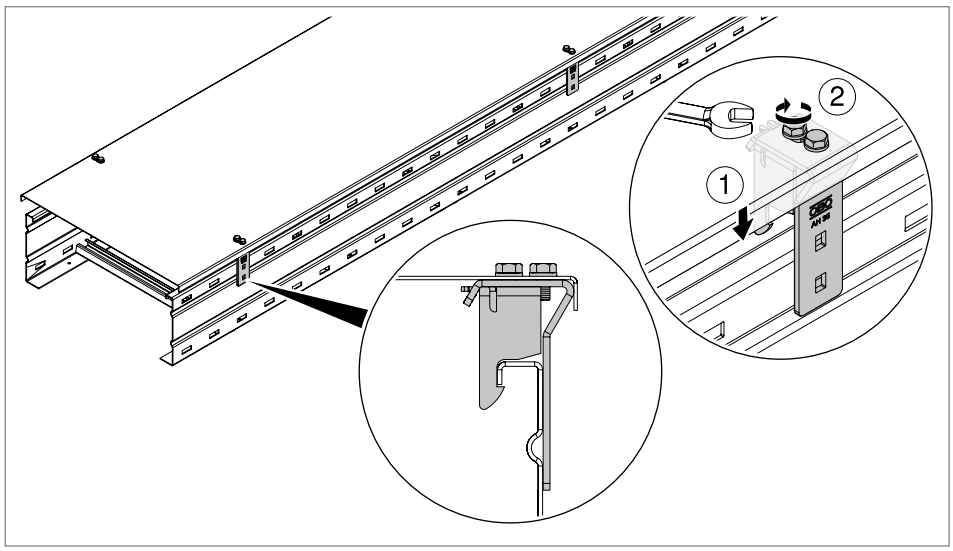

Fig. 64: Mounting the cover on the ladder

5. Place the cover on the ladder with spacers until the hooks under the rail edge engage.

6. Tighten all the first screws.

7. Mount two covers on 6 metres of cable ladder.

5.5.4 Mounting a fitting cover

The fitting covers are supplied with pre-mounted turn buckles. The mounting is the same as the mounting of the lengthwise cover, see „5.5.2 Mounting the WDRL and WKLD cover with turn buckle“ on page 51.

5.6 Mounting accessories

5.6.1 Mounting a wide span cable ladder with base plate

Wide span cable ladders are fastened vertically on the floor with the base plate WFP. The base plate is used for ladders with the 110 and 160 mm side height. The base plate is screwed to the ladder using FRS M8 truss-head bolts and combination nuts.

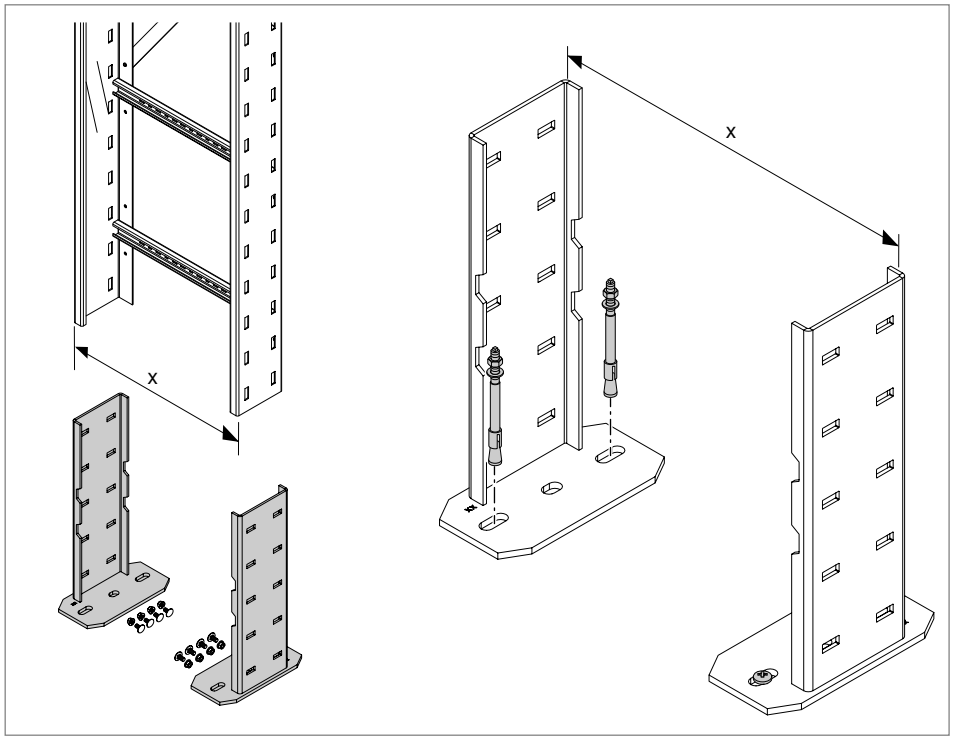

Fig. 65: WFP base plate

1. Anchor the base plate to the base.

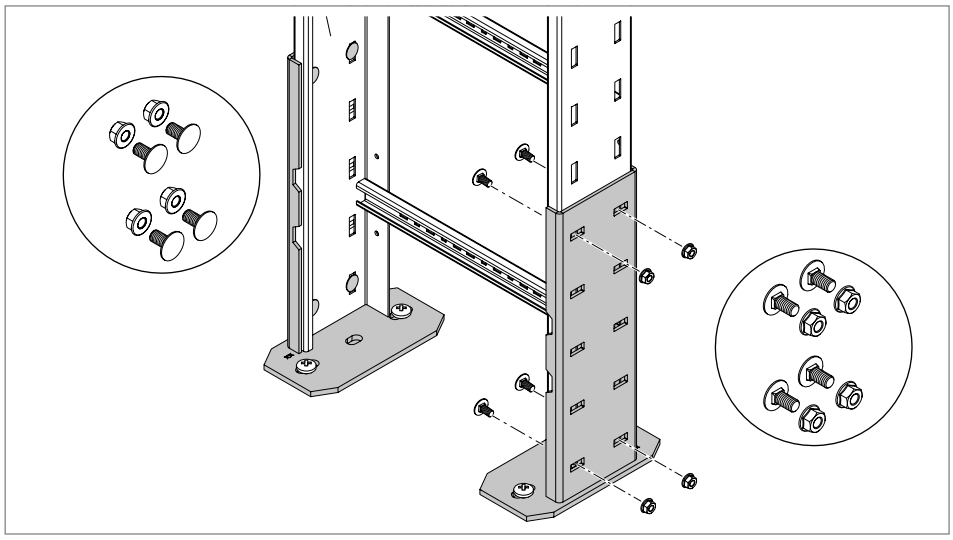

Fig. 66: Screwing the ladder to the base plate

2. Screw the wide span cable ladder to the base plate.

5.6.2 Mounting a clamping piece

Use the clamping pieces to fasten cable ladders to brackets. The clamping piece is screwed on with FRS M8 truss-head bolts and combination nuts.

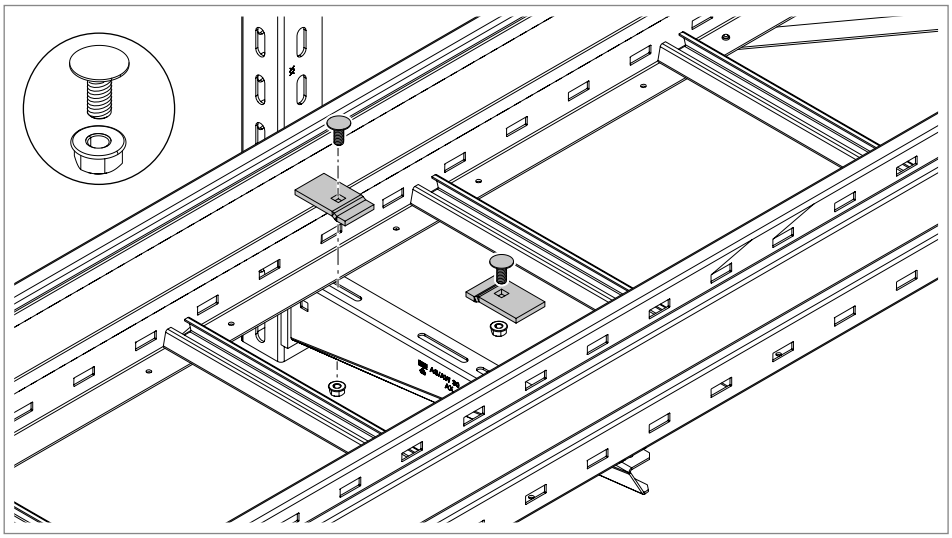

Fig. 67: Placing the clamping piece on the rail

1. Place the clamping piece on the inner side of the rail.

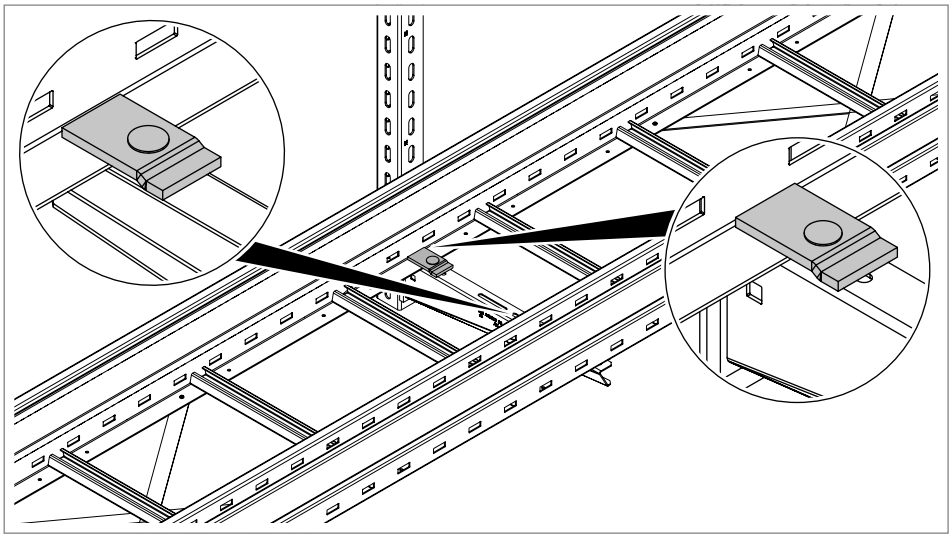

Fig. 68: Screwing on the clamping pieces

2. Screw on the clamping pieces.

5.6.3 Mounting end caps

End caps are placed on the cable ladder ends in order to avoid injuries from sharp edges.

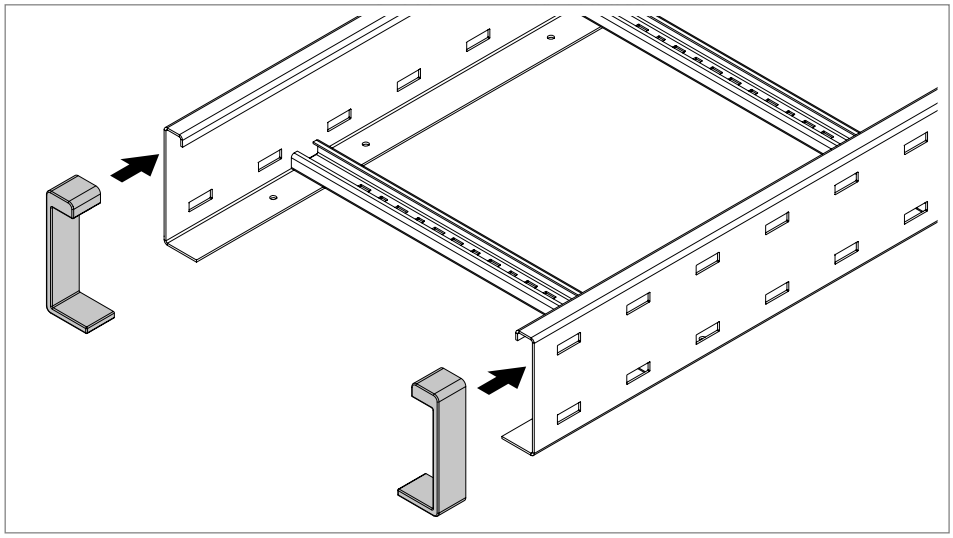

Fig. 69: Mounting end caps

1. Push end caps onto the ends of the cable ladders.

5.7 Creating equipotential bonding

The equipotential bonding is created using an earthing terminal.

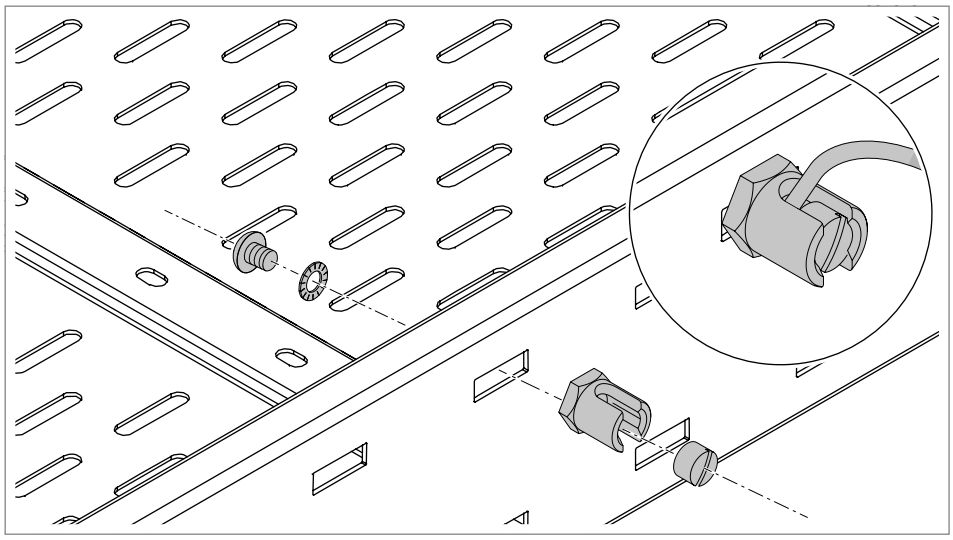

Fig. 70: Mounting the earthing terminal

1. Screw the earthing terminal to the rail of the ladder.
2. Electrically connect the earthing terminal to the overall equipotential bonding.

6 Maintaining the system

The stability and function of wide span systems can be impaired by external influences, such as damage or machine vibrations.

Loose connection elements must be retightened and damaged parts replaced. The connection to the overall equipotential bonding must be continually intact and thus checked regularly.

7 Dismantling the system

Dismantling of all the elements of wide span systems takes place in the reverse order to mounting.

8 Disposing of the system

Comply with the local waste disposal regulations.

– Metal: As scrap metal

– Plastic parts: As plastic

– Packaging: As household waste/as metal (depending on packaging type)

9 Technical data

Legend:

G = Electrogalvanised	DD = Hot-dip galvanised, Double Dip
FS = Strip galvanised	A2 = Stainless steel 1.4301
FT = Hot-dip galvanised	A4 = Stainless steel 1.4571
FT SO = Hot-dip galvanised, special layer thickness	PVC = Polyvinylchloride

Wide span cable ladders, length 6,000 mm

Designation	Type	Side height mm	Width mm	Surface	Item no.
Wide span cable ladders	WKLG 1120 FS	110	200	FS	6311008
Wide span cable ladders	WKLG 1130 FS	110	300	FS	6311012
Wide span cable ladders	WKLG 1140 FS	110	400	FS	6311016
Wide span cable ladders	WKLG 1150 FS	110	500	FS	6311020
Wide span cable ladders	WKLG 1160 FS	110	600	FS	6311024
Wide span cable ladders	WKLG 1120 FT	110	200	FT	6311059
Wide span cable ladders	WKLG 1130 FT	110	300	FT	6311063
Wide span cable ladders	WKLG 1140 FT	110	400	FT	6311067
Wide span cable ladders	WKLG 1150 FT	110	500	FT	6311071
Wide span cable ladders	WKLG 1160 FT	110	600	FT	6311075
Wide span cable ladders	WKLG 1120 A2	110	200	A2	6311202
Wide span cable ladders	WKLG 1130 A2	110	300	A2	6311206
Wide span cable ladders	WKLG 1140 A2	110	400	A2	6311210
Wide span cable ladders	WKLG 1150 A2	110	500	A2	6311214
Wide span cable ladders	WKLG 1160 A2	110	600	A2	6311218
Wide span cable ladders	WKLG 1120 A4	110	200	A4	6311218
Wide span cable ladders	WKLG 1130 A4	110	300	A4	6311227
Wide span cable ladders	WKLG 1140 A4	110	400	A4	6311229
Wide span cable ladders	WKLG 1150 A4	110	500	A4	6311231
Wide span cable ladders	WKLG 1160 A4	110	600	A4	6311233
Wide span cable ladders	WKLG 1120 FT SO	110	200	FT SO	7189018
Wide span cable ladders	WKLG 1130 FT SO	110	300	FT SO	7189019
Wide span cable ladders	WKLG 1140 FT SO	110	400	FT SO	7189024
Wide span cable ladders	WKLG 1150 FT SO	110	500	FT SO	7189020
Wide span cable ladders	WKLG 1160 FT SO	110	600	FT SO	7189022
Wide span cable ladders	WKLG 1620 FS	160	200	FS	6227023
Wide span cable ladders	WKLG 1630 FS	160	300	FS	6227031
Wide span cable ladders	WKLG 1640 FS	160	400	FS	6227058
Wide span cable ladders	WKLG 1650 FS	160	500	FS	6227066
Wide span cable ladders	WKLG 1660 FS	160	600	FS	6227074

Designation	Type	Side height mm	Width mm	Surface	Item no.
Wide span cable ladders	WKLG 1620 FT	160	200	FT	6227120
Wide span cable ladders	WKLG 1630 FT	160	300	FT	6227139
Wide span cable ladders	WKLG 1640 FT	160	400	FT	6227147
Wide span cable ladders	WKLG 1650 FT	160	500	FT	6227155
Wide span cable ladders	WKLG 1660 FT	160	600	FT	6227163
Wide span cable ladders	WKLG 1620 FS	160	200	A4	6227170
Wide span cable ladders	WKLG 1630 A4	160	300	A4	6227172
Wide span cable ladders	WKLG 1640 A4	160	400	A4	6227174
Wide span cable ladders	WKLG 1650 A4	160	500	A4	6227176
Wide span cable ladders	WKLG 1660 A4	160	600	A4	6227178
Wide span cable ladders	WKLG 1620 FT SO	160	200	FT SO	7189040
Wide span cable ladders	WKLG 1630 FT SO	160	300	FT SO	7189042
Wide span cable ladders	WKLG 1640 FT SO	160	400	FT SO	7189044
Wide span cable ladders	WKLG 1650 FT SO	160	500	FT SO	7189046
Wide span cable ladders	WKLG 1660 FT SO	160	600	FT SO	7189048
Wide span cable ladders	WKLG 2020 FT	200	200	FT	6232102
Wide span cable ladders	WKLG 2030 FT	200	300	FT	6232104
Wide span cable ladders	WKLG 2040 FT	200	400	FT	6232106
Wide span cable ladders	WKLG 2050 FT	200	500	FT	6232108
Wide span cable ladders	WKLG 2060 FT	200	600	FT	6232110

Fittings

Designation	Type	Side height mm	Width mm	Surface	Item no.
90° bend	WLB 90 112 FS	110	200	FS	6312330
90° bend	WLB 90 113 FS	110	300	FS	6312349
90° bend	WLB 90 114 FS	110	400	FS	6312357
90° bend	WLB 90 115 FS	110	500	FS	6312365
90° bend	WLB 90 116 FS	110	600	FS	6312373
90° bend	WLB 90 112 FT	110	200	FT	6312438
90° bend	WLB 90 113 FT	110	300	FT	6312446
90° bend	WLB 90 114 FT	110	400	FT	6312454
90° bend	WLB 90 115 FT	110	500	FT	6312462
90° bend	WLB 90 116 FT	110	600	FT	6312470
90° bend	WLB 90 112 A2	110	200	A2	6312539
90° bend	WLB 90 113 A2	110	300	A2	6312541
90° bend	WLB 90 114 A2	110	400	A2	6312543
90° bend	WLB 90 115 A2	110	500	A2	6312545
90° bend	WLB 90 116 A2	110	600	A2	6312547
90° bend	WLB 90 112 A4	110	200	A4	6312550

Designation	Type	Side height mm	Width mm	Surface	Item no.
90° bend	WLB 90 113 A4	110	300	A4	6312552
90° bend	WLB 90 114 A4	110	400	A4	6312554
90° bend	WLB 90 115 A4	110	500	A4	6312556
90° bend	WLB 90 116 A4	110	600	A4	6312558
90° bend	WLB 90 112 FT SO	110	200	FT SO	7191103
90° bend	WLB 90 113 FT SO	110	300	FT SO	7191104
90° bend	WLB 90 114 FT SO	110	400	FT SO	7191105
90° bend	WLB 90 115 FT SO	110	500	FT SO	7191106
90° bend	WLB 90 116 FT SO	110	600	FT SO	7191107
90° bend	WLB 90 162 FS	160	200	FS	6229336
90° bend	WLB 90 163 FS	160	300	FS	6229344
90° bend	WLB 90 164 FS	160	400	FS	6229352
90° bend	WLB 90 165 FS	160	500	FS	6229360
90° bend	WLB 90 166 FS	160	600	FS	6229379
90° bend	WLB 90 162 FT	160	200	FT	6229425
90° bend	WLB 90 163 FT	160	300	FT	6229433
90° bend	WLB 90 164 FT	160	400	FT	6229441
90° bend	WLB 90 165 FT	160	500	FT	6229468
90° bend	WLB 90 166 FT	160	600	FT	6229476
90° bend	WLB 90 162 A4	160	200	A4	6229500
90° bend	WLB 90 163 A4	160	300	A4	6229502
90° bend	WLB 90 164 A4	160	400	A4	6229504
90° bend	WLB 90 165 A4	160	500	A4	6229506
90° bend	WLB 90 166 A4	160	600	A4	6229508
90° bend	WLB 90 162 FT SO	160	200	FT SO	7191110
90° bend	WLB 90 163 FT SO	160	300	FT SO	7191112
90° bend	WLB 90 164 FT SO	160	400	FT SO	7191114
90° bend	WLB 90 165 FT SO	160	500	FT SO	7191116
90° bend	WLB 90 166 FT SO	160	600	FT SO	7191118
90° bend	WLB 90 2020 FT	200	200	FT	6233422
90° bend	WLB 90 2030 FT	200	300	FT	6233430
90° bend	WLB 90 2040 FT	200	400	FT	6233449
90° bend	WLB 90 2050 FT	200	500	FT	6233457
90° bend	WLB 90 2060 FT	200	600	FT	6233465
90° bend rising	WLBS 90 162 FT	160	200	FT	6230423
90° bend rising	WLBS 90 163 FT	160	300	FT	6230431
90° bend rising	WLBS 90 164 FT	160	400	FT	6230458
90° bend rising	WLBS 90 165 FT	160	500	FT	6230466
90° bend rising	WLBS 90 166 FT	160	600	FT	6230474
90° bend falling	WLBF 90 162 FT	160	200	FT	6230725

Designation	Type	Side height mm	Width mm	Surface	Item no.
90° bend falling	WLBF 90 163 FT	160	300	FT	6230733
90° bend falling	WLBF 90 164 FT	160	400	FT	6230741
90° bend falling	WLBF 90 165 FT	160	500	FT	6230768
90° bend falling	WLBF 90 166 FT	160	600	FT	6230776
T branch piece	WLT 1120 FS	110	200	FS	6312632
T branch piece	WLT 1130 FS	110	300	FS	6312640
T branch piece	WLT 1140 FS	110	400	FS	6312659
T branch piece	WLT 1150 FS	110	500	FS	6312667
T branch piece	WLT 1160 FS	110	600	FS	6312675
T branch piece	WLT 1120 FT	110	200	FT	6312713
T branch piece	WLT 1130 FT	110	300	FT	6312721
T branch piece	WLT 1140 FT	110	400	FT	6312748
T branch piece	WLT 1150 FT	110	500	FT	6312756
T branch piece	WLT 1160 FT	110	600	FT	6312764
T branch piece	WLT 1120 A2	110	200	A2	6312802
T branch piece	WLT 1130 A2	110	300	A2	6312804
T branch piece	WLT 1140 A2	110	400	A2	6312806
T branch piece	WLT 1150 A2	110	500	A2	6312808
T branch piece	WLT 1160 A2	110	600	A2	6312810
T branch piece	WLT 1120 A4	110	200	A4	6312815
T branch piece	WLT 1130 A4	110	300	A4	6312817
T branch piece	WLT 1140 A4	110	400	A4	6312819
T branch piece	WLT 1150 A4	110	500	A4	6312821
T branch piece	WLT 1160 A4	110	600	A4	6312823
T branch piece	WLT 1620 FT	160	200	FT	6229727
T branch piece	WLT 1630 FT	160	300	FT	6229735
T branch piece	WLT 1640 FT	160	400	FT	6229743
T branch piece	WLT 1650 FT	160	500	FT	6229751
T branch piece	WLT 1660 FT	160	600	FT	6229778
T branch piece	WLT 1620 A4	160	200	A4	6229820
T branch piece	WLT 1630 A4	160	300	A4	6229822
T branch piece	WLT 1640 A4	160	400	A4	6229824
T branch piece	WLT 1650 A4	160	500	A4	6229826
T branch piece	WLT 1660 A4	160	600	A4	6229828
T branch piece	WLT 2020 FT	200	200	FT	6233627
T branch piece	WLT 2030 FT	200	300	FT	6233635
T branch piece	WLT 2040 FT	200	400	FT	6233643
T branch piece	WLT 2050 FT	200	500	FT	6233651
T branch piece	WLT 2060 FT	200	600	FT	6233678
Add-on tee	WRAA 120 FS	110	200	FS	6098405

Designation	Type	Side height mm	Width mm	Surface	Item no.
Add-on tee	WRAA 130 FS	110	300	FS	6098409
Add-on tee	WRAA 140 FS	110	400	FS	6098413
Add-on tee	WRAA 150 FS	110	500	FS	6098417
Add-on tee	WRAA 160 FS	110	600	FS	6098421
Add-on tee	WRAA 120 FT	110	200	FT	6098445
Add-on tee	WRAA 130 FT	110	300	FT	6098449
Add-on tee	WRAA 140 FT	110	400	FT	6098453
Add-on tee	WRAA 150 FT	110	500	FT	6098457
Add-on tee	WRAA 160 FT	110	600	FT	6098461
Add-on tee	WRAA 120 FT SO	110	200	FT SO	6091000
Add-on tee	WRAA 130 FT SO	110	300	FT SO	6091001
Add-on tee	WRAA 140 FT SO	110	400	FT SO	6091002
Add-on tee	WRAA 150 FT SO	110	500	FT SO	6091003
Add-on tee	WRAA 160 FT SO	110	600	FT SO	6091004
Add-on tee	WRAA 162 FS	160	200	FS	6098800
Add-on tee	WRAA 163 FS	160	300	FS	6098804
Add-on tee	WRAA 164 FS	160	400	FS	6098808
Add-on tee	WRAA 165 FS	160	500	FS	6098812
Add-on tee	WRAA 166 FS	160	600	FS	6098816
Add-on tee	WRAA 162FT	160	200	FT	6098827
Add-on tee	WRAA 163 FT	160	300	FT	6098831
Add-on tee	WRAA 164 FT	160	400	FT	6098835
Add-on tee	WRAA 165 FT	160	500	FT	6098839
Add-on tee	WRAA 166 FT	160	600	FT	6098843
Add-on tee	WRAA 162 FT SO	160	200	FT SO	7191013
Add-on tee	WRAA 163 FT SO	160	300	FT SO	7191015
Add-on tee	WRAA 164 FT SO	160	400	FT SO	7191016
Add-on tee	WRAA 165 FT SO	160	500	FT SO	7191017
Add-on tee	WRAA 166 FT SO	160	600	FT SO	7191018
Cross-over	WLK 1120 FT	110	200	FT	6312934
Cross-over	WLK 1130 FT	110	300	FT	6312942
Cross-over	WLK 1140 FT	110	400	FT	6312950
Cross-over	WLK 1150 FT	110	500	FT	6312969
Cross-over	WLK 1160 FT	110	600	FT	6312977

Connectors

Designation	Type	Side height mm	Length mm	Width mm	Surface	Item no.
Straight connector	WRVL 110 FS	110	500	20	FS	6091164
Straight connector	WRVL 110 FT	110	500	20	FT	6091180
Straight connector	WRVL 110 A2	110	500	20	A2	6091229
Straight connector	WRVL 110 A4	110	500	20	A4	6091234
Straight connector	WRVL 110 FT SO	110	500	20	FT SO	7189214
Straight connector	WRVL 160 FS	160	500	20	FS	6227708
Straight connector	WRVL 160 FT	160	500	20	FT	6227716
Straight connector	WRVL 160 A2	160	500	20	A2	6227724
Straight connector	WRVL 160 A4	160	500	20	A4	6227730
Straight connector	WRVL 160 FT SO	160	500	20	FT SO	6227732
Straight connector	WRV 200 FT	200	500	20	FT	6232507
45° angle connector, inner	WRWV 160 I FS	160	540	20	FS	6227902
45° angle connector, inner	WRWV 160 I FT	160	540	20	FT	6227910
45° angle connector, inner	WRWV 160 I A2	160	540	20	A2	6227914
45° angle connector, outer	WRWV 160 A FS	160	540	20	FS	6227856
45° angle connector, outer	WRWV 160 A FT	160	540	20	FT	6227864
45° angle connector, outer	WRWV 160 A A2	160	540	20	A2	6227868
45° angle connector, inner	WRWV 200 I FT	200	540	20	FT	6232612
45° angle connector, outer	WRWV 200 A FT	200	540	20	FT	6232604
Angle connector	WRWVK 110 FS	110	250	20	FS	6091377
Angle connector	WRWVK 110 A2	110	250	20	A2	6091393
Angle connector	WRWVK 110 A4	110	250	20	A4	6091397
Angle connector	WRWVK 160 FS	160	500	20	FS	6227832
Angle connector	WRWVK 160 A2	160	500	20	A2	6227836
Angle connector	WRWVK 160 A4	160	500	20	A4	6227837
Angle connector, vertical	WRWVV 110 FS	110	283	116	FS	6091379
Angle connector, vertical	WRWVV 160 FT	160	290	167	FT	6227850
Angle connector, vertical	WRWV 200 V FT	200	500	35	FT	6232663
Adjustable connector	WRGV 110 FS	110	380	20	FS	6091318
Adjustable connector	WRGV 110 FT	110	380	20	FT	6091334
Adjustable connector	WRGV 110 A2	110	380	20	A2	6091338
Adjustable connector	WRGV 110 A4	110	380	20	A4	6091343
Adjustable connector	WRGV 110 FT SO	110	380	20	FT SO	7189218
Adjustable connector	WRGV 160 FS	160	380	20	FS	6227953
Adjustable connector	WRGV 160 FT	160	380	20	FT	6227961
Adjustable connector	WRGV 160 A2	160	380	20	A2	6227965
Adjustable connector	WRGV 160 A4	160	380	20	A4	6227967
Adjustable connector	WRGV 160 FT SO	160	380	20	FT SO	7189220

Covers

Designation	Type	Length mm	Width mm	Surface	Item no.
Cover with turn buckle, wide span system 110 and 160	WDRL 1116 20 FS	3000	200	FS	6227422
Cover with turn buckle, wide span system 110 and 160	WDRL 1116 30 FS	3000	300	FS	6227430
Cover with turn buckle, wide span system 110 and 160	WDRL 1116 40 FS	3000	400	FS	6227449
Cover with turn buckle, wide span system 110 and 160	WDRL 1116 50 FS	3000	500	FS	6227457
Cover with turn buckle, wide span system 110 and 160	WDRL 1116 60 FS	3000	600	FS	6227465
Cover with turn buckle, wide span system 110 and 160	WDRL 1116 20 DD	3000	200	DD	6227600
Cover with turn buckle, wide span system 110 and 160	WDRL 1116 30 DD	3000	300	DD	6227604
Cover with turn buckle, wide span system 110 and 160	WDRL 1116 40 DD	3000	400	DD	6227608
Cover with turn buckle, wide span system 110 and 160	WDRL 1116 50 DD	3000	500	DD	6227612
Cover with turn buckle, wide span system 110 and 160	WDRL 1116 60 DD	3000	600	DD	6227616
Cover with turn buckle, wide span system 110 and 160	WDRL 1116 20 A2	3000	200	A2	6227360
Cover with turn buckle, wide span system 110 and 160	WDRL 1116 30 A2	3000	300	A2	6227362
Cover with turn buckle, wide span system 110 and 160	WDRL 1116 40 A2	3000	400	A2	6227364
Cover with turn buckle, wide span system 110 and 160	WDRL 1116 50 A2	3000	500	A2	6227366
Cover with turn buckle, wide span system 110 and 160	WDRL 1116 60 A2	3000	600	A2	6227368
Cover with turn buckle, wide span system 110 and 160	WDRL 1116 20 A4	3000	200	A4	6227361
Cover with turn buckle, wide span system 110 and 160	WDRL 1116 30 A4	3000	300	A4	6227363
Cover with turn buckle, wide span system 110 and 160	WDRL 1116 40 A4	3000	400	A4	6227365
Cover with turn buckle, wide span system 110 and 160	WDRL 1116 50 A4	3000	500	A4	6227367
Cover with turn buckle, wide span system 110 and 160	WDRL 1116 60 A4	3000	600	A4	6227369
Cover with turn buckle, wide span system 200	WKLD 2020 DD	3000	200	DD	6232402
Cover with turn buckle, wide span system 200	WKLD 2030 DD	3000	300	DD	6232404
Cover with turn buckle, wide span system 200	WKLD 2040 DD	3000	400	DD	6232406
Cover with turn buckle, wide span system 200	WKLD 2050 DD	3000	500	DD	6232408
Cover with turn buckle, wide span system 200	WKLD 2060 DD	3000	600	DD	6232410
Cover in roof shape, wide span system 110 and 160	WDRLU DF 1116 2 FT	3000	200	FT	6227261

Covers for fittings

Designation	Type	For side hight mm	Width mm	Surface	Item no.
Cover, 90° bend, wide span system 110 and 160	WDBRL 90 20 FS	110/160	200	FS	6231462
Cover, 90° bend, wide span system 110 and 160	WDBRL 90 30 FS	110/160	300	FS	6231470
Cover, 90° bend, wide span system 110 and 160	WDBRL 90 40 FS	110/160	400	FS	6231489
Cover, 90° bend, wide span system 110 and 160	WDBRL 90 50 FS	110/160	500	FS	6231497
Cover, 90° bend, wide span system 110 and 160	WDBRL 90 60 FS	110/160	600	FS	6231500
Cover, 90° bend, wide span system 110 and 160	WDBRL 90 20 DD	110/160	200	DD	6231527
Cover, 90° bend, wide span system 110 and 160	WDBRL 90 30 DD	110/160	300	DD	6231535
Cover, 90° bend, wide span system 110 and 160	WDBRL 90 40 DD	110/160	400	DD	6231543
Cover, 90° bend, wide span system 110 and 160	WDBRL 90 50 DD	110/160	500	DD	6231551
Cover, 90° bend, wide span system 110 and 160	WDBRL 90 60 DD	110/160	600	DD	6231578
Cover, T branch piece, wide span system 110 and 160	WDTRL 200 DD	110/160	200	DD	6231667
Cover, T branch piece, wide span system 110 and 160	WDTRL 300 DD	110/160	300	DD	6231675
Cover, T branch piece, wide span system 110 and 160	WDTRL 400 DD	110/160	400	DD	6231683
Cover, T branch piece, wide span system 110 and 160	WDTRL 500 DD	110/160	500	DD	6231691
Cover, T branch piece, wide span system 110 and 160	WDTRL 600 DD	110/160	600	DD	6231705
Cover, add-on tee, wide span system 110 and 160	WAAD 200 FS	110/160	200	FS	6231900
Cover, add-on tee, wide span system 110 and 160	WAAD 300 FS	110/160	300	FS	6231904
Cover, add-on tee, wide span system 110 and 160	WAAD 400 FS	110/160	400	FS	6231908
Cover, add-on tee, wide span system 110 and 160	WAAD 500 FS	110/160	500	FS	6231912
Cover, add-on tee, wide span system 110 and 160	WAAD 600 FS	110/160	600	FS	6231916

Accessories

Designation	Type	Height distance mm	Surface	Item no.
Spacer for cover, wide span systems	AH 35 WS A2	35	A2	6065477

Designation	Type	Dimensions mm	Surface	Item no.
Clamping piece	LKS 60 5 FT	60 x 35	FT	6232485
Clamping piece	LKS 60 5 FT SO	60 x 35	FT SO	7189208
Base plate	WFP 110 FT	300 x 200 x 20	FT	6232500
Base plate	WFP 160 FT	382 x 169 x 20	FT	6232510

Designation	Type	Conductor cross-sections	Material	Item no.
Earthing terminal with M6 fastening thread	EKL 25 M6	4 - 50 mm²	Messing	6404006
Earthing terminal with M8 fastening thread	EKL 25 M8	4 - 50 mm²	Messing	6404001
Earthing terminal with M6 fastening thread	EKL 35 M6	25 - 70 mm²	Messing	6404014
Earthing terminal with M8 fastening thread	EKL 35 M8	25 - 70 mm²	Messing	6404016

Designation	Type	Dimensions mm	Material	Item no.
End caps for wide span cable ladder 110	SKHW 110 OR	110 x 30	PVC	6320398

Designation	Type	Dimensions mm	Resistance	Surface	Item no.
FRS truss-head bolt with combination nut	FRSB 6x12 G	M6 x 12	5.6	G	6406130
FRS truss-head bolt with combination nut	FRSB 6x12 F	M6 x 12	5.6	F	6406122
FRS truss-head bolt with combination nut	FRSB 6x16 F	M6 x 16	5.6	F	6406157
FRS truss-head bolt with combination nut	FRSB 6x20 F	M6 x 20	5.6	F	6406203
FRS truss-head bolt with combination nut	FRSB 6x30 F	M6 x 30	5.6	F	6406907
FRS truss-head bolt with combination nut	FRSB 6x12 A2	M6 x 12	A2-70	A2	6406138
FRS truss-head bolt with combination nut	FRSB 6x16 A2	M6 x 16	A2-70	A2	6406189
FRS truss-head bolt with combination nut	FRSB 6x20 A2	M6 x 20	A2-70	A2	6406205
FRS truss-head bolt with combination nut	FRSB 6x12 A4	M6 x 12	A4-50	A4	6406142
FRS truss-head bolt with combination nut	FRSB 6x16 A4	M6 x 16	A4-50	A4	6406193
FRS truss-head bolt with combination nut	FRSB 6x20 A4	M6 x 20	A4-50	A4	6406207

OBO Bettermann Holding GmbH & Co. KG
P.O. Box 1120
58694 Menden
GERMANY

Technical Office
Tel.: +49 2373 89 - 13 00

technical-office@obo.de

www.obo-bettermann.com

Stand 09/2026

251011.02

Building Connections