Technical data sheet

T piece adapter WDK 40060

Item number: 6113310

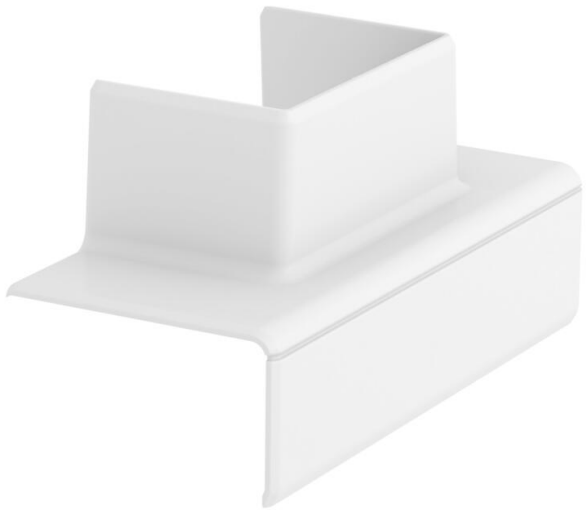

T-piece adapter to create a 90° junction from the system size Rapid 45-2 53100 and 53165 on a cable trunking WDK40060.

PC/ ABS Polycarbonate/Acrylnitrile-butadiene-styrene

Master data

Item number	6113310
Type	GK-TA WDK 1RW
Description 1	T piece adaptor
Description 2	100 and 165 to WDK 40060
Manufacturer	OBO
Dimension	120x62x56
Colour	Pure white; RAL 9010
Material	Polycarbonate/Acrylnitrile-butadiene-styrene
Smallest sales unit	1
Unit of quantity	Piece
Weight	3.002 kg
Weight unit	kg/100 pc.
CO2 Footprint (GWP) Cradle-to-Gate	0,1904 kg CO2e / 1 Piece

Technical data sheet

T piece adapter WDK 40060

Item number: 6113310

Dimensions

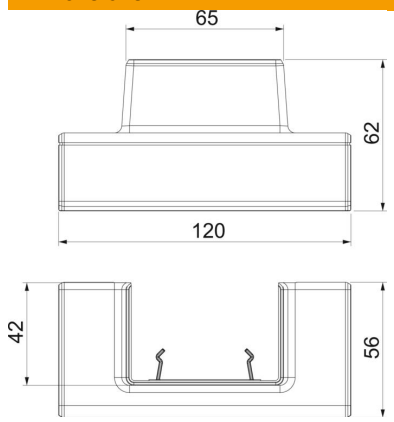

Length	120 mm
Width	62 mm
Height	55.5 mm

Technical data

Number of covers	0
Version for	Hood fitting
for duct width	100 mm
for trunking height	53 mm
Halogen-free	yes
Cable retaining clip	no
Duct connector	no
Cover mounting type	Cross-over
Mounting perforation in base	no
Cover width	0 mm
Cover width 2	0 mm
Cover width 3	0 mm
ROHS-conformant	yes
Protection rating	IP40
Protective film	no
Protection rating IK code	IK08
Symmetrical	no
Permitted temperature range, max.	60 °C
Permitted temperature range, min.	-15 °C