Data Sheet | Item Number: 891-8993/105-101

pre-assembled connecting cable; Eca; Socket/open-ended; 3-pole; Cod. A; 1 m; 1,00 mm²; black

https://www.wago.com/891-8993/105-101

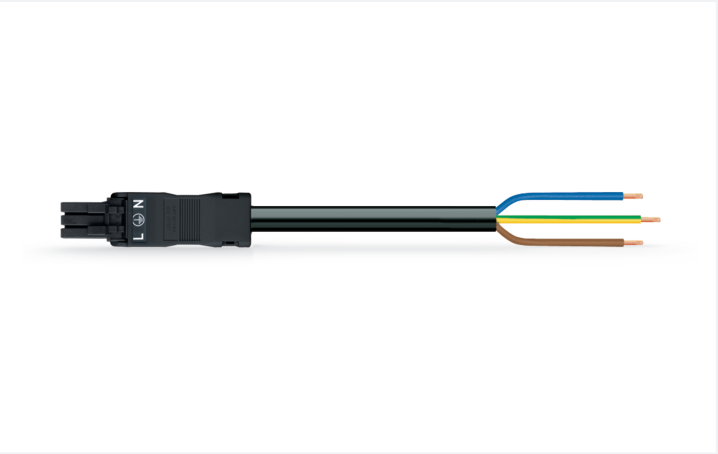

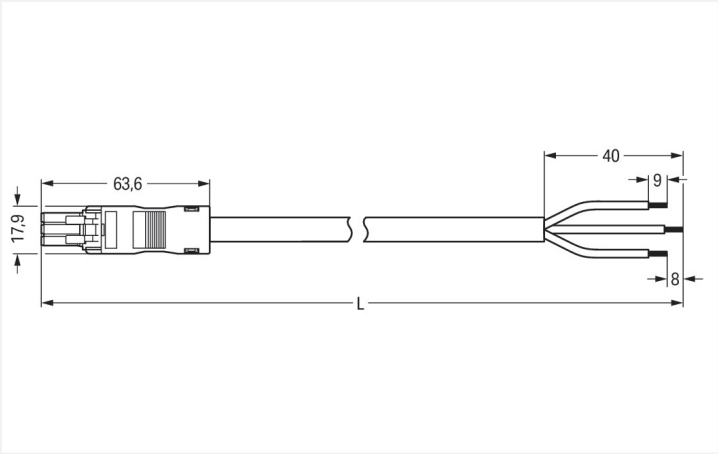

Color: ■ black

Dimensions in mm

Cable assembly *WINSTA*® MINI with protection against mismating

The *WINSTA*® MINI cable assembly with protection against mismating supports fast, reliable installation. Our pluggable installation connectors with spring pressure connection technology work entirely without screw connections. They allow fast, efficient, error-free installation in a large number of possible uses. For greater protection in electrical installations, the pluggable installation connector is equipped with mechanical protection against mismating. The pluggable installation connector is protected against ingress by solid granular objects with a diameter below 1 mm in accordance with protection type IP40. Standard mains applications for almost any domain of use can be realised with *WINSTA*® MINI pluggable installation connectors with A coding. Thanks to its particularly minimal dimensions, our *WINSTA*® MINI Pluggable Connection System with Push-in CAGE CLAMP® spring pressure connection technology is especially suitable in very tight spaces, i.e., for connections when very little room is available. Of course, the safety of buildings must always be ensured, even after the electrical installation has been performed. The required safety requirements in connection with EU CPR are fully satisfied by this product through fire class E.

Pluggable connections instead of screw connections – cable assemblies from WAGO

The cable assembly is equipped with a socket and a free end. WINSTA® is the pluggable connection system that is optimally tailored to the strict requirements of electrical installation. It allows fast, secure and, above all, error-free installation of components and cables. Choose durability and quality – with protection type IP40 from WAGO makes the installation of electrical components visibly easier.

- protection against mismating eliminates errors
- compact design for conductors with a cross-section up to 1.5 mm²
- suitable for any application
- flexible installation to save space
- fast, secure installation

Notes

Note	Cables with a different fire class can be found in the eShop.

Electrical data

Ratings per	IEC/EN 60664-1		
Overvoltage category	III	III	II
Pollution degree	3	2	2
Nominal voltage	250 V	-	-
Rated impulse withstand voltage	4 kV	-	-
Rated current	10 A	-	-

General information	
Note on contact resistance	approx. 1 mΩ of contact resistance approx. 0.25 mΩ contact transition plug/socket

Connection Data

Total number of potentials	3
PE function	Preceding PE contact
Conductor preparation	ultrasonically tip-bonded

Connection 1	
Strip length	9 mm / 0.35 inches
Pole number	3
Wire cross-section	1 mm²
Strip length (outer insulation)	40 mm
Connection type	Socket - free end

Physical data

Pin spacing	4.4 mm / 0.173 inches
Width	17.9 mm / 0.705 inches
Height	14 mm / 0.551 inches
Total length	1 m

Mechanical data

Use	General mains applications
Coding	A
Variable coding	No
Marking	L ⏚ N
Potential marking	L ⏚ N
Mating force of a plug-in connection	approx. 20 … 70 N (depending on pole number)
Retention force of a plug-in connection	when locked: > 80N
Unmating force of a plug-in connection	when unlocked: approx. 20 … 70 N (depending on pole number)
Number of mating cycles	200, without resistive load
Connection type	Socket - free end
Type of pre-assembled cable	Connecting cable
Cable type	H05VV-F 3G1
Protection type	IP40

Plug-in connection

Mismating protection	Yes
Note on mismating protection	All *WINSTA*® components are 100% protected against mismating when: a.) plugging different numbers of poles b.) plugging while rotated 180 c.) plugging while laterally staggered d.) plugging one pole
Locking lever	Can be retrofitted
Locking of plug-in connection	Locking lever
Note on locking system	All connectors for mounted installations (snap-in versions for lighting fixtures or devices, all types of PCB and distribution connectors) are factory-equipped with locking levers to ensure plugs and sockets are securely locked. Additional locking levers are only required for flying leads (plug/socket).

 Continued on next page

Material data

Note (material data)	Information on material specifications can be found here
Color	black
Insulation material (main housing)	Polyamide (PA66)
Flammability class per UL94	V0
Fire class per EN 50575	E_{ca}
Contact material	Copper or copper alloy; surface-treated
Contact Plating	Tin
Fire load	29.768 MJ
Connector color	black
Strain relief color	black
Sheathed cable color	black
Printing color of sheathed cable	white
Halogen-free	No
Silicon-free	Yes
Sheath material	PVC
Rubber cable	No
Weight	81.5 g
Copper weight of the raw cable	0.029 kg/m

Environmental requirements

Processing temperature	-5 … +40 °C
Continuous operating temperature	-35 … +85 °C
Note on continuous operating temperature	Cable for temperatures ≤ 70 °C (including halogen-free) Insulating parts for temperatures ≤ 105 °C

Commercial data

PU (SPU)	1 pcs
Packaging type	unpacked
Country of origin	PL
GTIN	4055143355216
Customs tariff number	85444290900

Product Classification

UNSPSC	26121629
eCl@ss 10.0	27-44-06-04
eCl@ss 9.0	27-44-06-04
ETIM 9.0	EC002587
ETIM 10.0	EC002587
ECCN	NO US CLASSIFICATION

Environmental Product Compliance

RoHS Compliance Status	Compliant,No Exemption

 Continued on next page

Downloads

Environmental Product Compliance

Compliance Search
Environmental Product Compliance 891-8993/105-101

Documentation

Bid Text			
891-8993/105-101	19.02.2019	xml 3.00 KB	
891-8993/105-101	26.11.2014	doc 23.50 KB	

CAD/CAE-Data

CAE data
EPLAN Data Portal 891-8993/105-101
WSCAD Universe 891-8993/105-101

1 Compatible Products

1.1 Required Accessories

1.1.1 Locking system

1.1.1.1 Locking system

Item No.: 890-111
Locking lever; for flying leads; for tool operation; black

Item No.: 890-131
Locking lever; for flying leads; for tool operation; white

Item No.: 890-101
Locking lever; for manual operation; black

Item No.: 890-121
Locking lever; for manual operation; white

1.2 Optional Accessories

1.2.1 Cover

1.2.1.1 Cover

Item No.: 897-2001
Protective cap; Type1; for sockets and plugs; PVC; red

 Continued on next page

1.2.2 Installation

1.2.2.1 Mounting accessories

Item No.: 890-310
Mounting carrier; 2- to 5-pole; for flying leads; black

Item No.: 890-311
Mounting carrier; 2- to 5-pole; for flying leads; white