Technical data sheet

Quick clip, aluminium

Item number: 2149940

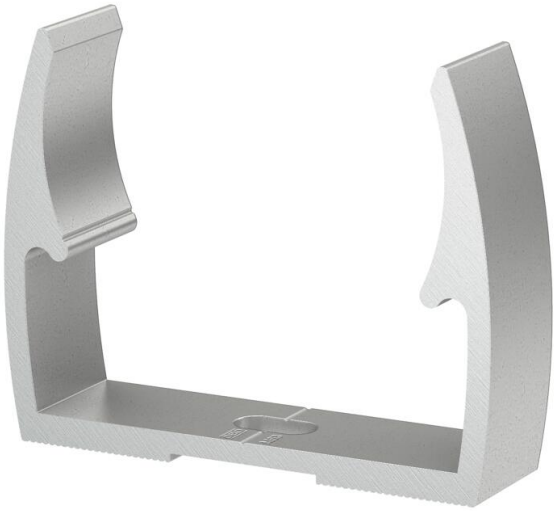

OBO Quick clip, type ALQ M, for all metric ALU pipe systems, as well as light-duty and heavy-duty insulation pipes. Suitable for mounting the OBO pipe system, material: aluminium. Pipe centring aids allow optimal attachment of the pipe and automatically turn the clip into the correct position.

Slot for side alignment during mounting with wood screw or knock-in anchor.

Recommended fastening spacing 50−60 cm.

CE

Alu Aluminium

Master data

Item number	2149940
Type	ALQ M40
Description 1	Quick clip
Manufacturer	OBO
Dimension	M40
Material	Aluminium
Smallest sales unit	50
Unit of quantity	Piece
Weight	2.4 kg
Weight unit	kg/100 pc.
CO2 Footprint (GWP) Cradle-to-Gate	0,392 kg CO2e / 1 Piece

Technical data sheet

Quick clip, aluminium

Item number: 2149940

Dimensions

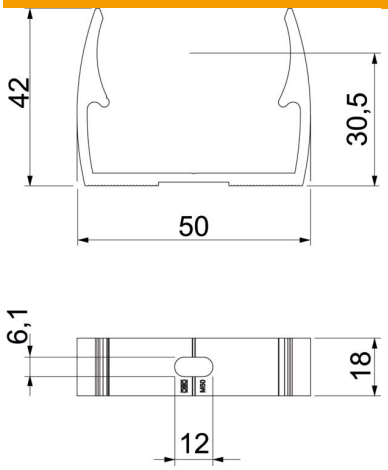

Dimension A	50 mm
Dimension B	18 mm
Dimension E	6.1 mm
Dimension F	12 mm
Dimension h	30.5 mm
Dimension H	42 mm

Technical data

Expandable	no
Number of cables/pipes	1
Pull-out value	120 N
Fastening type	Screw hole
Closed	no
Halogen-free	no
With inlay	no
Nominal size	40
ROHS-conformant	yes
Clamping range D, max.	40 mm
Clamping range D, min.	40 mm
Permitted temperature range, max.	90 °C
Permitted temperature range, min.	-25 °C
UV-resistant	yes
Resistance to impact	6 J
Resistance to lateral load	200 N
Resistance to axial load	50 N
Resistance against corrosion	High