Instruction Leaflet **PUB53675**

Effective December 2021
Supersedes November 2021

PowerXL DM1 and DM1 Pro series VFD

(Original instructions)

Instruction Leaflet
Montageanweisung
Notice d'installation
Instrucciones de montaje
Istruzioni per il montaggio
安装说明
Инструкция по монтажу
Montagehandleiding
Montagevejledning
Οδηγίες εγκατάστασης
Instruções de montagem
Monteringsanvisning
Asennusohje
Návod k montáži
Paigaldusjuhend
Szerelési utasítás
Montāžas instrukcija
Montavimo instrukcija
Instrukcja montażu
Navodila za montažo
Návod na montáž
Монтажни инструкции
Instrucțiuni de montaj
Upute za montažu
Montaj talimatı
Інструкція з монтажу
منشـــــور التعليمـــــات

(en) **Electric current! Danger to life!**
Only skilled or instructed persons may carry out the following operations.

(de) **Lebensgefahr durch elektrischen Strom!**
Nur Elektrofachkräfte und elektrotechnisch unterwiesene Personen dürfen die im Folgenden beschriebenen Arbeiten ausführen.

(fr) **Tension électrique dangereuse !**
Seules les personnes qualifiées et averties doivent exécuter les travaux ci-après.

(es) **¡Corriente eléctrica! ¡Peligro de muerte!**
El trabajo a continuación descrito debe ser realizado por personas cualificadas y advertidas.

(it) **Tensione elettrica: Pericolo di morte!**
Solo persone abilitate e qualificate possono eseguire le operazioni di seguito riportate.

(zh) **触电危险！**
只允许专业人员和受过专业训练的人员进行下列工作。

(ru) **Электрический ток! Опасно для жизни!**
Только специалисты или проинструктированные лица могут выполнять следующие операции.

(nl) **Levensgevaar door elektrische stroom!**
Uitsluitend deskundigen in elektriciteit en elektrotechnisch geïnstrueerde personen is het toegestaan, de navolgend beschreven werkzaamheden uit te voeren.

(da) **Livsfare på grund af elektrisk strøm!**
Kun uddannede el-installatører og personer der e instruerede i elektrotekniske arbejdsopgaver, må udføre de nedenfor anførte arbejder.

(el) **Προσοχή, κίνδυνος ηλεκτροπληξίας!**
Οι εργασίες που αναφέρονται στη συνέχεια θα πρέπει να εκτελούνται μόνο από ηλεκτρολόγους και ηλεκτροτεχνίτες.

(pt) **Perigo de vida devido a corrente eléctrica!**
Apenas electricistas e pessoas com formação electrotécnica podem executar os trabalhos que a seguir se descrevem.

(sv) **Livsfara genom elektrisk ström!**
Endast utbildade elektriker och personer som undervisats i elektroteknik får utföra de arbeten som beskrivs nedan.

(fi) **Hengenvaarallinen jännite!**
Vain pätevät sähköasentajat ja opastusta saaneet henkilöt saavat suorittaa seuraavat työt.

(cs) **Nebezpečí úrazu elektrickým proudem!**
Níže uvedené práce smějí provádět pouze osoby s elektrotechnickým vzděláním.

(et) **Eluohtlik! Elektrilöögioht!**
Järgnevalt kirjeldatud töid tohib teostada ainult elektriala spetsialist või elektrotehnilise instrueerimise läbinud personal.

(hu) **Életveszély az elektromos áram révén!**
Csak elektromos szakemberek és elektrotechnikában képzett személyek végezhetik el a következőkben leírt munkákat.

(lv) **Elektriskā strāva apdraud dzīvību!**
Tālāk aprakstītos darbus drīkst veikt tikai elektrospeciālisti un darbam ar elektrotehniskām iekārtām instruētās personas!

(lt) **Pavojus gyvybei dėl elektros srovės!**
Tik elektrikai ir elektrotechnikos specialistai gali atlikti žemiau aprašytus darbus.

(pl) **Porażenie prądem elektrycznym stanowi zagrożenie dla życia!**
Opisane poniżej prace mogą przeprowadzać tylko wykwalifikowani elektrycy oraz osoby odpowiednio poinstruowane w zakresie elektrotechniki.

(sl) **Življenjska nevarnost zaradi električnega toka!**
Spodaj opisana dela smejo izvajati samo elektrostrokovnjaki in elektrotehnično poučene osebe.

(sk) **Nebezpečenstvo ohrozenia života elektrickým prúdom!**
Práce, ktoré sú nižšie opísané, smú vykonávať iba elektroodborníci a osoby s elektrotechnickým vzdelaním.

(bg) **Опасност за живота от електрически ток!**
Операциите, описани в следващите раздели, могат да се извършват само от специалисти-електротехници и инструктиран електротехнически персонал.

(ro) **Atenție! Pericol electric!**
Toate lucrările descrise trebuie efectuate numai de personal de specialitate calificat şi de persoane cu cunoştiinţe profunde în electrotehnică.

(hr) **Opasnost po život uslijed električne struje!**
Radove opisane u nastavku smiju obavljati samo stručni električari i osobe koje su prošle elektrotehničku obuku.

(tr) **Elektrik akımı! Hayati tehlike!**
Aşağıdaki işlemleri yalnızca kalifiye veya eğitimli kişiler gerçekleştirebilir.

(uk) **Електричний струм! Небезпечно для життя!**
Виконувати означені далі операції дозволяється тільки кваліфікованим особам, що пройшли інструктаж.

(ar) **! تحـذير ! تيـار كهربـائي ! خطـر مـوت**
لا تتـــم اعمـــال الصـــيانة و التركيـــب
! الا مـــن قبـــل العـــاملين المـــدربين

Eaton.com/EcoDesign-VFD

MZ040046EN

Powering Business Worldwide

Catalog numbering system

Series				Power part								Options					Region	
D	M	1	-	3	4	4	D	3	E	B	-	S	2	0	S	-		

Basic naming
- **D** = Drive

Series
- **M** = Machinery

Product generation
- **1** = First generation
- **2** = Second generation

Phase reference
- **3** = 3~ INPUT / 3~ OUTPUT
- **1** = 1~ INPUT / 3~ OUTPUT

Input / output voltage rating
- **1** = 115 V (100 - 120 V + 10%/-15%)
- **2** = 230 V (200 - 240 V + 10%/-15%)
- **4** = 400 V (380 - 480 V + 10%/-15%)
- **5** = 575 V (525 - 600 V + 10%/-15%)

Internal EMC filter
- **E** = Internal EMC filter
- **N** = No EMC filter

Internal brake chopper
- **N** = No brake chopper
- **B** = Brake chopper

Display options
- **N** = No display
- **S** = Multi-segment LCD display (DM1 Pro)

IP rating
- **20** = IP20

Control options
- **B** = No STO, No Ethernet communications, and No option cards
- **S** = STO SIL2 and Ethernet I/P, Modbus TCP onboard, and Option card port (DM1 Pro)

Region
- **Blank** = US
- **EM** = EMEA
- **AP** = APAC

Output current rating (single phase input)		Output current rating (three phase input)		
100 - 120 v	200 - 240 v	200 - 240 v	380 - 480 v	525 - 600 v
1D6 = 1.6 A, 0.18 kW, 0.25 hp	1D6 = 1.6 A, 0.18 kW, 0.25 hp	1D6 = 1.6 A, 0.18 kW, 0.25 hp	1D5 = 1.5 A, 0.37 kW, 0.50 hp	4D5 = 4.5 A, 2.20 kW, 3.00 hp
3D0 = 3.0 A, 0.37 kW, 0.50 hp	3D0 = 3.0 A, 0.37 kW, 0.50 hp	3D0 = 3.0 A, 0.37 kW, 0.50 hp	2D2 = 2.2 A, 0.75 kW, 1.00 hp	7D5 = 7.5 A, 3.00 kW, 5.00 hp
4D8 = 4.8 A, 0.75 kW, 1.00 hp	4D8 = 4.8 A, 0.75 kW, 1.00 hp	4D8 = 4.8 A, 0.75 kW, 1.00 hp	4D3 = 4.3 A, 1.50 kW, 2.00 hp	010 = 10.0 A, 5.50 kW, 7.50 hp
6D9 = 6.9 A, 1.10 kW, 1.50 hp	7D8 = 7.8 A, 1.50 kW, 2.00 hp	7D8 = 7.8 A, 1.50 kW, 2.00 hp	5D6 = 5.6 A, 2.20 kW, 3.00 hp	013 = 13.5 A, 7.50 kW, 10.00 hp
	011 = 11.0 A, 2.20 kW, 3.00 hp	011 = 11.0 A, 2.20 kW, 3.00 hp	7D6 = 7.6 A, 3.00 kW, 5.00 hp	018 = 18.0 A, 11.00 kW, 15.00 hp
	017 = 17.5 A, 4.00 kW, 5.00 hp	017 = 17.5 A, 4.00 kW, 5.00 hp	012 = 12.0 A, 5.50 kW, 7.50 hp	022 = 22.0 A, 15.00 kW, 20.00 hp
		025 = 25.3 A, 5.50 kW, 7.50 hp	016 = 16.0 A, 7.50 kW, 10.00 hp	
		032 = 32.2 A, 7.50 kW, 10.00 hp	023 = 23.0 A, 11.00 kW, 15.00 hp	
		048 = 48.3 A, 11.00 kW, 15.00 hp	031 = 31.0 A, 15.00 kW, 20.00 hp	
			038 = 38.0 A, 18.50 kW, 25.00 hp	

Shading legend

FR1	FR2	FR3	FR4

DM1 option cards list:

1) DXM-NET-PROFIBUS : DM1 PROFIBUS communications card
2) DXM-NET-CANOPEN : DM1 CANOPEN communication card
3) DXG-NET-SWD-IP20 DG1: Smartwire communication card and module IP20
4) DXG-NET-SWD-IP54 DG1 : Smartwire communication card and module IP54

(en) **Dimensions and weights**
(de) **Abmessungen und Gewichte**
(fr) **Encombrements et poids**
(es) **Dimensiones y pesos**
(it) **Dimensioni e pesi**
(zh) **尺寸和重量**
(ru) **Размеры и вес**
(nl) **Afmetingen en gewichten**
(da) **Mål og vægt**
(el) **Διαστάσεις και βάρη**
(pt) **Medições e pesos**
(sv) **Dimensioner och vikter**
(fi) **Mitat ja painot**
(cs) **Rozměry a hmotnosti**
(et) **Mõõtmed ja kaalud**
(hu) **Méretek és Súly**
(lv) **Izmēri un svars**
(lt) **Matmenys ir svoriai**
(pl) **Wymiary i masy**
(sl) **Dimenzije in teže**
(sk) **Rozmery a hmotnosti**
(bg) **Размери и тегло**
(ro) **Dimensiuni şi greutăţi**
(hr) **Dimenzije i težina**
(tr) **Boyutlar ve ağırlıklar**
(uk) **Габаритні розміри й вага**
(ar) **الأبعـــاد والأوزان**

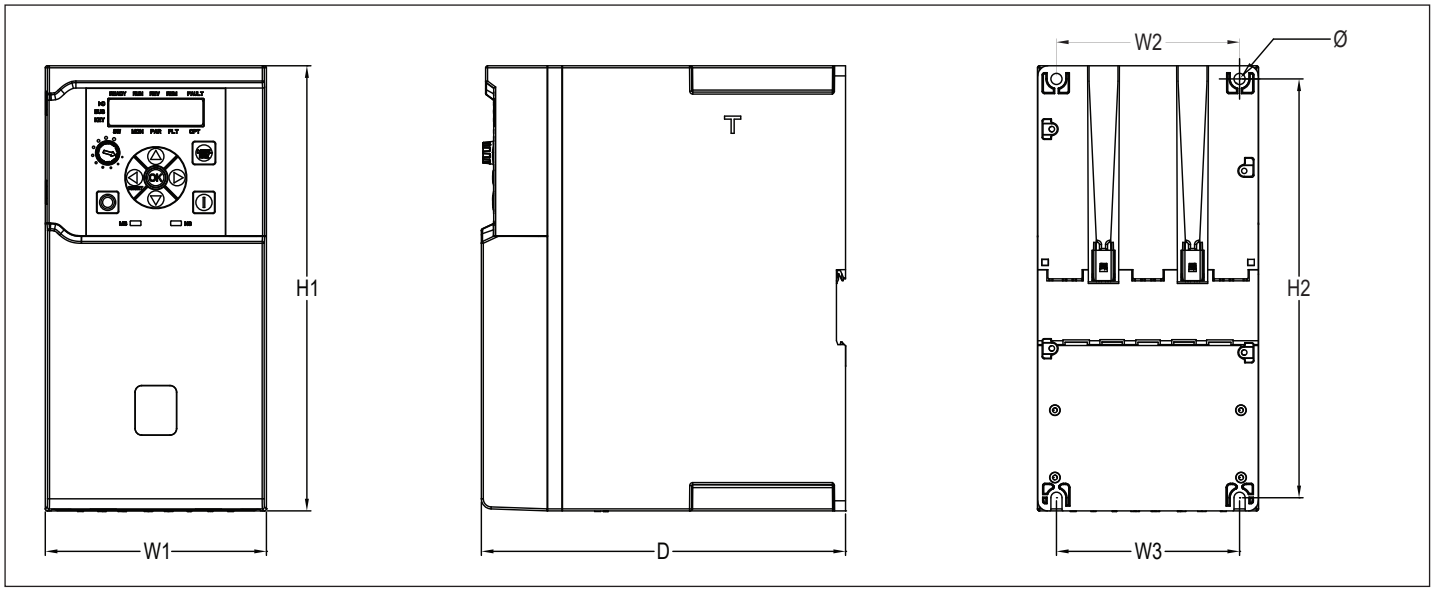

Table 1. Approximate mounting dimensions in inches (mm).

			Output rating		Dimensions							Weight
Input voltage	**Frame size**	**Drive catalog number**	**CT/IH current amps**	**VT/IL current amps**	**D in. (mm)**	**H1 in. (mm)**	**H2 in. (mm)**	**W1 in. (mm)**	**W2 in. (mm)**	**W3 in. (mm)**	**Φ in. (mm)**	**lb (kg)**
100 Vac to 120 Vac 50/60 Hz 1 phase	FR1	DM1-111D6…	1.6	2.5	7.09 (180)	5.98 (152)	5.51 (140)	2.83 (72)	2.26 (57.5)	2.26 (57.5)	0.20 (5.2)	2.6 (1.2)
		DM1-113D0…	3	4.8	7.09 (180)	5.98 (152)	5.51 (140)	2.83 (72)	2.26 (57.5)	2.26 (57.5)	0.20 (5.2)	2.6 (1.2)
	FR2	DM1-114D8…	4.8	6.9	7.09 (180)	8.66 (220)	8.15 (207)	4.29 (109)	3.56 (90.5)	3.56 (90.5)	0.22 (5.5)	5.7 (2.6)
		DM1-116D9…	6.9	7.8	7.09 (180)	8.66 (220)	8.15 (207)	4.29 (109)	3.56 (90.5)	3.56 (90.5)	0.22 (5.5)	5.7 (2.6)
200 Vac to 240 Vac 50/60 Hz 1 phase	FR1	DM1-121D6…	1.6	2.5	7.09 (180)	5.98 (152)	5.51 (140)	2.83 (72)	2.26 (57.5)	2.26 (57.5)	0.20 (5.2)	2.6 (1.2)
		DM1-123D0…	3	4.8	7.09 (180)	5.98 (152)	5.51 (140)	2.83 (72)	2.26 (57.5)	2.26 (57.5)	0.20 (5.2)	2.6 (1.2)
		DM1-124D8…	4.8	7.8	7.09 (180)	5.98 (152)	5.51 (140)	2.83 (72)	2.26 (57.5)	2.26 (57.5)	0.20 (5.2)	2.6 (1.2)
	FR2	DM1-127D8…	7.8	11	7.09 (180)	8.66 (220)	8.15 (207)	4.29 (109)	3.56 (90.5)	3.56 (90.5)	0.22 (5.5)	5.7 (2.6)
		DM1-12011…	11	17.5	7.09 (180)	8.66 (220)	8.15 (207)	4.29 (109)	3.56 (90.5)	3.56 (90.5)	0.22 (5.5)	5.7 (2.6)
	FR3	DM1-12017…	17.5	25.3	7.09 (180)	10.24 (260)	9.72 (247)	5.12 (130)	4.57 (116)	4.57 (116)	0.22 (5.5)	8.2 (3.7)
200 Vac to 240 Vac 50/60 Hz 3 phase	FR1	DM1-321D6…	1.6	2.5	7.09 (180)	5.98 (152)	5.51 (140)	2.83 (72)	2.26 (57.5)	2.26 (57.5)	0.20 (5.2)	2.6 (1.2)
		DM1-323D0…	3	4.8	7.09 (180)	5.98 (152)	5.51 (140)	2.83 (72)	2.26 (57.5)	2.26 (57.5)	0.20 (5.2)	2.6 (1.2)
		DM1-324D8…	4.8	7.8	7.09 (180)	5.98 (152)	5.51 (140)	2.83 (72)	2.26 (57.5)	2.26 (57.5)	0.20 (5.2)	2.6 (1.2)
		DM1-327D8…	7.8	11	7.09 (180)	5.98 (152)	5.51 (140)	2.83 (72)	2.26 (57.5)	2.26 (57.5)	0.20 (5.2)	2.6 (1.2)
	FR2	DM1-32011…	11	17.5	7.09 (180)	8.66 (220)	8.15 (207)	4.29 (109)	3.56 (90.5)	3.56 (90.5)	0.22 (5.5)	5.7 (2.6)
		DM1-32017…	17.5	25.3	7.09 (180)	8.66 (220)	8.15 (207)	4.29 (109)	3.56 (90.5)	3.56 (90.5)	0.22 (5.5)	5.7 (2.6)
	FR3	DM1-32025…	25.3	32.2	7.09 (180)	10.24 (260)	9.72 (247)	5.12 (130)	4.57 (116)	4.57 (116)	0.22 (5.5)	8.2 (3.7)
	FR4	DM1-32032…	32.2	48.3	7.68 (195)	11.81 (300)	11.06 (281)	7.24 (184)	6.3 (160)	6.3 (160)	0.24 (6)	13.9 (6.3)
		DM1-32048…	48.3	62.1	7.68 (195)	11.81 (300)	11.06 (281)	7.24 (184)	6.3 (160)	6.3 (160)	0.24 (6)	13.9 (6.3)

Table 1. Approximate mounting dimensions in inches (mm)(Continued).

			Output rating		Dimensions							Weight
Input voltage	**Frame size**	**Drive catalog number**	**CT/IH current amps**	**VT/IL current amps**	**D in. (mm)**	**H1 in. (mm)**	**H2 in. (mm)**	**W1 in. (mm)**	**W2 in. (mm)**	**W3 in. (mm)**	**Φ in. (mm)**	**lb (kg)**
380 Vac to 480 Vac 50/60 Hz 3 phase	FR1	DM1-341D5…	1.5	2.2	7.09 (180)	5.98 (152)	5.51 (140)	2.83 (72)	2.26 (57.5)	2.26 (57.5)	0.20 (5.2)	2.6 (1.2)
		DM1-342D2…	2.2	4.3	7.09 (180)	5.98 (152)	5.51 (140)	2.83 (72)	2.26 (57.5)	2.26 (57.5)	0.20 (5.2)	2.6 (1.2)
		DM1-344D3…	4.3	5.6	7.09 (180)	5.98 (152)	5.51 (140)	2.83 (72)	2.26 (57.5)	2.26 (57.5)	0.20 (5.2)	2.6 (1.2)
		DM1-345D6…	5.6	7.6	7.09 (180)	5.98 (152)	5.51 (140)	2.83 (72)	2.26 (57.5)	2.26 (57.5)	0.20 (5.2)	2.6 (1.2)
	FR2	DM1-347D6…	7.6	12	7.09 (180)	8.66 (220)	8.15 (207)	4.29 (109)	3.56 (90.5)	3.56 (90.5)	0.22 (5.5)	5.7 (2.6)
		DM1-34012…	12	16	7.09 (180)	8.66 (220)	8.15 (207)	4.29 (109)	3.56 (90.5)	3.56 (90.5)	0.22 (5.5)	5.7 (2.6)
		DM1-34016…	16	23	7.09 (180)	8.66 (220)	8.15 (207)	4.29 (109)	3.56 (90.5)	3.56 (90.5)	0.22 (5.5)	5.7 (2.6)
	FR3	DM1-34023..	23	31	7.09 (180)	10.24 (260)	9.72 (247)	5.12 (130)	4.57 (116)	4.57 (116)	0.22 (5.5)	8.2 (3.7)
	FR4	DM1-34031…	31	38	7.68 (195)	11.81 (300)	11.06 (281)	7.24 (184)	6.3 (160)	6.3 (160)	0.24 (6)	13.9 (6.3)
		DM1-34038…	38	46	7.68 (195)	11.81 (300)	11.06 (281)	7.24 (184)	6.3 (160)	6.3 (160)	0.24 (6)	13.9 (6.3)
525 Vac to 600 Vac 50/60 Hz 3 phase	FR2	DM1-351D7…	1.7	2.7	7.09 (180)	8.66 (220)	8.15 (207)	4.29 (109)	3.56 (90.5)	3.56 (90.5)	0.22 (5.5)	5.7 (2.6)
		DM1-352D7…	2.7	4.5	7.09 (180)	8.66 (220)	8.15 (207)	4.29 (109)	3.56 (90.5)	3.56 (90.5)	0.22 (5.5)	5.7 (2.6)
		DM1-354D5…	4.5	7.5	7.09 (180)	8.66 (220)	8.15 (207)	4.29 (109)	3.56 (90.5)	3.56 (90.5)	0.22 (5.5)	5.7 (2.6)
		DM1-357D5…	7.5	10	7.09 (180)	8.66 (220)	8.15 (207)	4.29 (109)	3.56 (90.5)	3.56 (90.5)	0.22 (5.5)	5.7 (2.6)
		DM1-35010…	10	13.5	7.09 (180)	8.66 (220)	8.15 (207)	4.29 (109)	3.56 (90.5)	3.56 (90.5)	0.22 (5.5)	5.7 (2.6)
	FR3	DM1-35013…	13.5	18	7.09 (180)	10.24 (260)	9.72 (247)	5.12 (130)	4.57 (116)	4.57 (116)	0.22 (5.5)	8.2 (3.7)
	FR4	DM1-35018…	18	22	7.68 (195)	11.81 (300)	11.06 (281)	7.24 (184)	6.3 (160)	6.3 (160)	0.24 (6)	13.9 (6.3)
		DM1-35022…	22	27	7.68 (195)	11.81 (300)	11.06 (281)	7.24 (184)	6.3 (160)	6.3 (160)	0.24 (6)	13.9 (6.3)

(en) **Mounting**	(it) **Montaggio**	(da) **Montering**	(fi) **Asennus**	(lv) **Montāža**	(sk) **Montáž**	(tr) **Montaj**
(de) **Montage**	(zh) **安装**	(el) **Τοποθέτηση**	(cs) **Montáž**	(lt) **Montavimas**	(bg) **Монтаж**	(uk) **Монтаж**
(fr) **Montage**	(ru) **Монтаж**	(pt) **Montagem**	(et) **Paigaldamine**	(pl) **Montaż**	(ro) **Montarea**	(ar) **التركيـــــب**
(es) **Montaje**	(nl) **Montering**	(sv) **Montering**	(hu) **Felszerelése**	(sl) **Montaža**	(hr) **Montaža**	

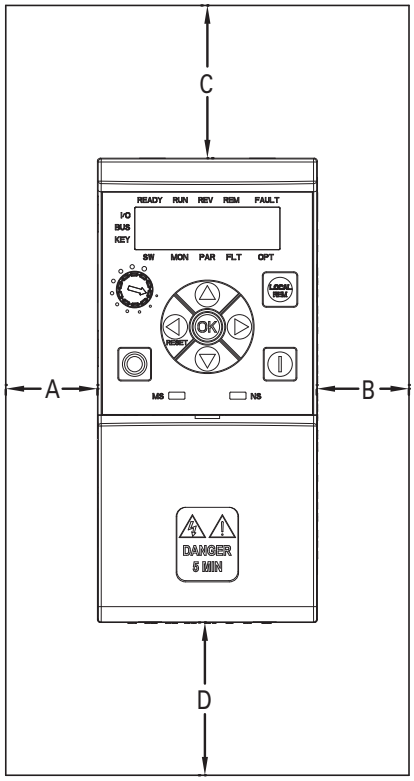

Table 2. Approximate space requirements in inches (mm).

			Output rating		Mounting clearance imperial				Airflow
Input voltage	**Frame size**	**Drive catalog number**	**CT/IH current amps**	**VT/IL current amps**	**A in. (mm)**	**B in. (mm)**	**C in. (mm)**	**D in. (mm)**	**CFM (m3/h)**
100 Vac to 120 Vac, 50/60 Hz 1 phase	FR1	DM1-111D6…	1.6	2.5	0	0	1.97 (50)	1.97 (50)	14.83 (25.2)
		DM1-113D0…	3	4.8	0	0	1.97 (50)	1.97 (50)	14.83 (25.2)
	FR2	DM1-114D8…	4.8	6.9	0	0	1.97 (50)	1.97 (50)	24.72 (42)
		DM1-116D9…	6.9	7.8	0	0	1.97 (50)	1.97 (50)	24.72 (42)
200 Vac to 240 Vac, 50/60 Hz 1 phase	FR1	DM1-121D6…	1.6	2.5	0	0	1.97 (50)	1.97 (50)	14.83 (25.2)
		DM1-123D0…	3	4.8	0	0	1.97 (50)	1.97 (50)	14.83 (25.2)
		DM1-124D8…	4.8	7.8	0	0	1.97 (50)	1.97 (50)	14.83 (25.2)
	FR2	DM1-127D8…	7.8	11	0	0	1.97 (50)	1.97 (50)	24.72 (42)
		DM1-12011…	11	17.5	0	0	1.97 (50)	1.97 (50)	24.72 (42)
	FR3	DM1-12017…	17.5	25.3	0	0	1.97 (50)	1.97 (50)	42.37 (72)
200 Vac to 240 Vac, 50/60 Hz 3 phase	FR1	DM1-321D6…	1.6	2.5	0	0	1.97 (50)	1.97 (50)	14.83 (25.2)
		DM1-323D0…	3	4.8	0	0	1.97 (50)	1.97 (50)	14.83 (25.2)
		DM1-324D8…	4.8	7.8	0	0	1.97 (50)	1.97 (50)	14.83 (25.2)
		DM1-327D8…	7.8	11	0	0	1.97 (50)	1.97 (50)	14.83 (25.2)
	FR2	DM1-32011…	11	17.5	0	0	1.97 (50)	1.97 (50)	24.72 (42)
		DM1-32017…	17.5	25.3	0	0	1.97 (50)	1.97 (50)	24.72 (42)
	FR3	DM1-32025…	25.3	32.2	0	0	1.97 (50)	1.97 (50)	42.37 (72)
	FR4	DM1-32032…	32.2	48.3	0	0	1.97 (50)	1.97 (50)	75.56 (128.4)
		DM1-32048…	48.3	62.1	0	0	1.97 (50)	1.97 (50)	75.56 (128.4)

Note: For DM1 drives with an option card, allow 2.76 in. or 70 mm for dimension A for the option card enclosure.

Table 2. Approximate space requirements in inches (mm) (Continued).

			Output rating		Mounting clearance imperial				Airflow
Input voltage	**Frame size**	**Drive catalog number**	**CT/IH current amps**	**VT/IL current amps**	**A in. (mm)**	**B in. (mm)**	**C in. (mm)**	**D in. (mm)**	**CFM (m3/h)**
380 Vac to 480 Vac, 50/60 Hz 3 phase	FR1	DM1-341D5…	1.5	2.2	0	0	1.97 (50)	1.97 (50)	14.83 (25.2)
		DM1-342D2…	2.2	4.3	0	0	1.97 (50)	1.97 (50)	14.83 (25.2)
		DM1-344D3…	4.3	5.6	0	0	1.97 (50)	1.97 (50)	14.83 (25.2)
		DM1-345D6…	5.6	7.6	0	0	1.97 (50)	1.97 (50)	14.83 (25.2)
	FR2	DM1-347D6…	7.6	12	0	0	1.97 (50)	1.97 (50)	37.43 (63.6)
		DM1-34012…	12	16	0	0	1.97 (50)	1.97 (50)	37.43 (63.6)
		DM1-34016…	16	23	0	0	1.97 (50)	1.97 (50)	37.43 (63.6)
	FR3	DM1-34023..	23	31	0	0	1.97 (50)	1.97 (50)	58.61 (99.6)
	FR4	DM1-34031…	31	38	0	0	1.97 (50)	1.97 (50)	57.56 (97.8)
		DM1-34038…	38	46	0	0	1.97 (50)	1.97 (50)	57.56 (97.8)
525 Vac to 600 Vac, 50/60 Hz 3 phase	FR2	DM1-351D7…	1.7	2.7	0	0	1.97 (50)	1.97 (50)	37.43 (63.6)
		DM1-352D7…	2.7	4.5	0	0	1.97 (50)	1.97 (50)	37.43 (63.6)
		DM1-354D5…	4.5	7.5	0	0	1.97 (50)	1.97 (50)	37.43 (63.6)
		DM1-357D5…	7.5	10	0	0	1.97 (50)	1.97 (50)	37.43 (63.6)
		DM1-35010…	10	13.5	0	0	1.97 (50)	1.97 (50)	37.43 (63.6)
	FR3	DM1-35013…	13.5	18	0	0	1.97 (50)	1.97 (50)	58.61 (99.6)
	FR4	DM1-35018…	18	22	0	0	1.97 (50)	1.97 (50)	57.56 (97.8)
		DM1-35022…	22	27	0	0	1.97 (50)	1.97 (50)	57.56 (97.8)

Note: For DM1 drives with an option card, allow 2.76 in. or 70 mm for dimension A for the option card enclosure.

FR1 mounting instructions

Step 1.

Lift the drive out from the carton and remove the packaging. The magnetic cores and cable ties are only included in EMI version drive.

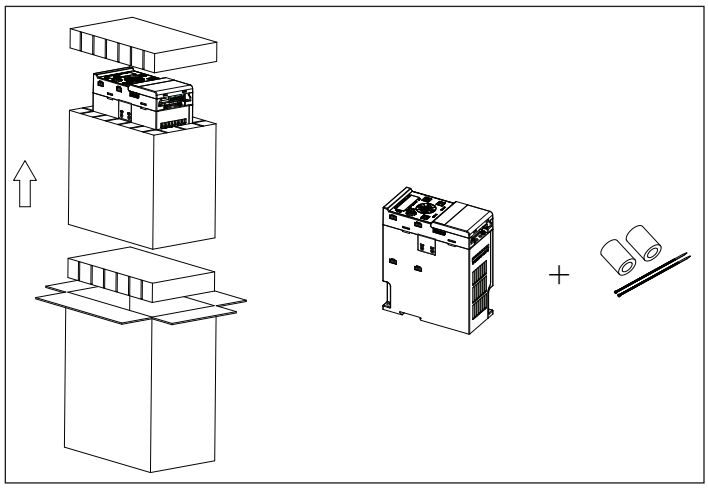

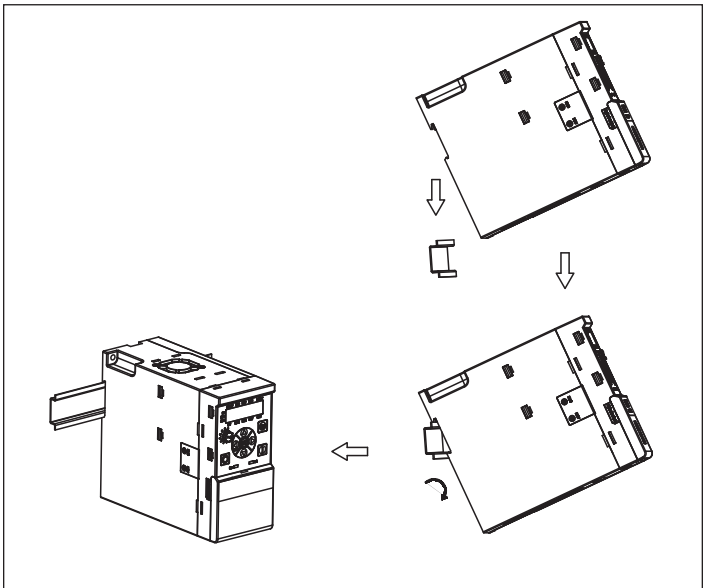

DIN Rail mounting

Step 2.

Screw mounting: Attach the drive to the mounting plate with two M5x20 (or 3/16 in.) screws and two M5 (or 3/16 in.) nuts. The opening dimension on the mounting plate should follow required dimension (refer to the dimension drawing in Table 1 of this document).

DIN Rail mounting: Lift the drive at an angle about 30 degrees. Align the top hooks of drive DIN rail mounting slot with DIN rail top edge. Push down and rotate the drive to clip the bottom hooks on the bottom DIN rail edge.

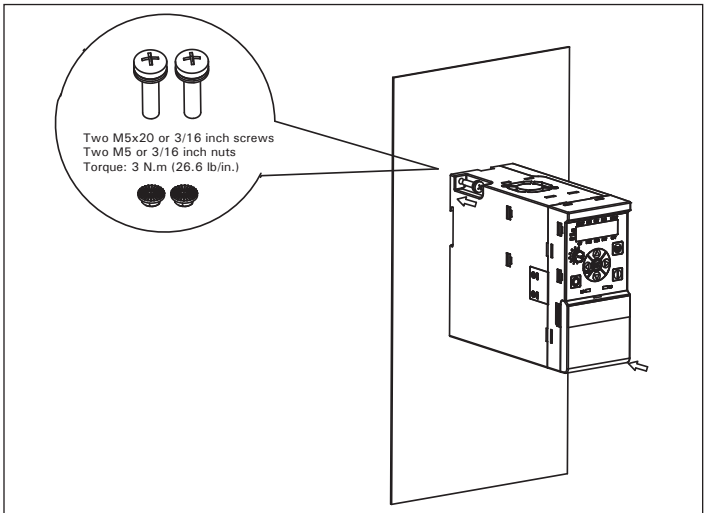

Screw mounting

Step 3. (EMI version only):

The input wires (including 3 line wires and 1 input grounding wire) should run through the input magnetic core before connecting to input terminal block and grounding hole. Use a cable tie to tie the input magnetic cores to the input wires. The output wires (only 3 motor wires) should run through the output magnetic core before connecting to output terminal block.

The output grounding wire should not run through the output magnetic core. Use a cable tie to tie the output magnetic cores to the output wires. The maximum distance between input / output magnetic cores top surface and drive bottom surface is 100 mm (3.94 in.). The input magnetic core and output magnetic core are the same for FR1.

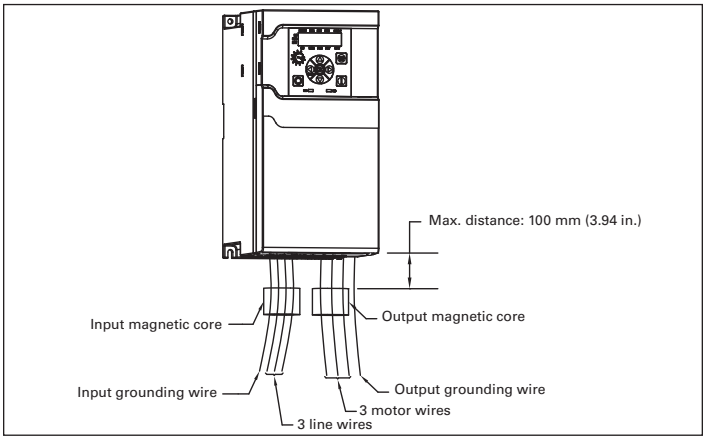

FR2 mounting instructions

Step 1.

Lift the drive out from the carton, remove the packaging. The magnetic cores and cable ties are only included in EMI version drive.

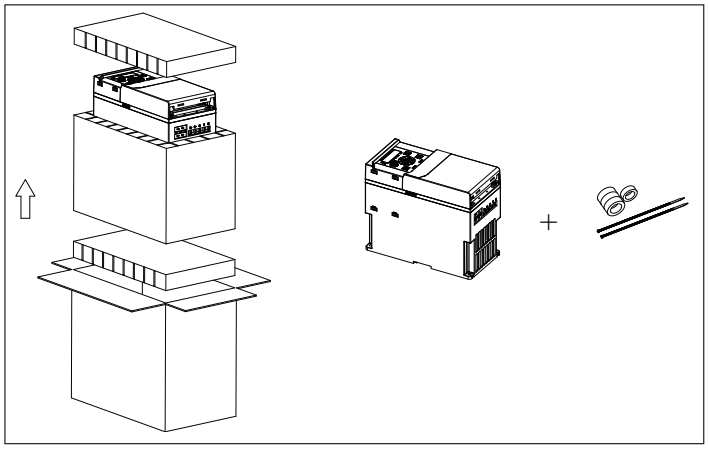

Step 2.

Screw mounting: Attach the drive to the mounting plate with four M5X20 (or 3/16 in.) screws and four M5 (or 3/16 in.) nuts. The opening dimension on the mounting plate should follow required dimension (refer to the dimension drawing in the instruction leaflet).

DIN Rail mounting: Lift the drive at an angle about 30 degrees. Align the top hooks of drive DIN rail mounting slot with DIN rail top edge. Push down and rotate the drive to clip the bottom hooks on the bottom DIN rail edge.

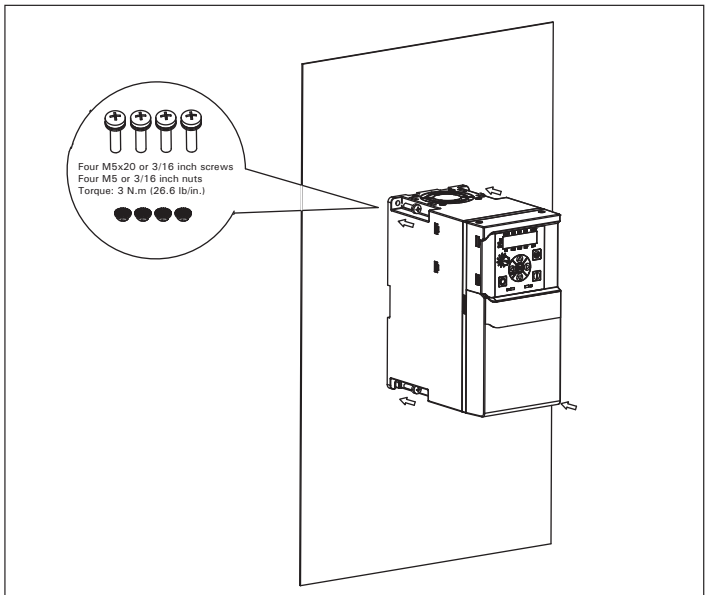

Screw mounting

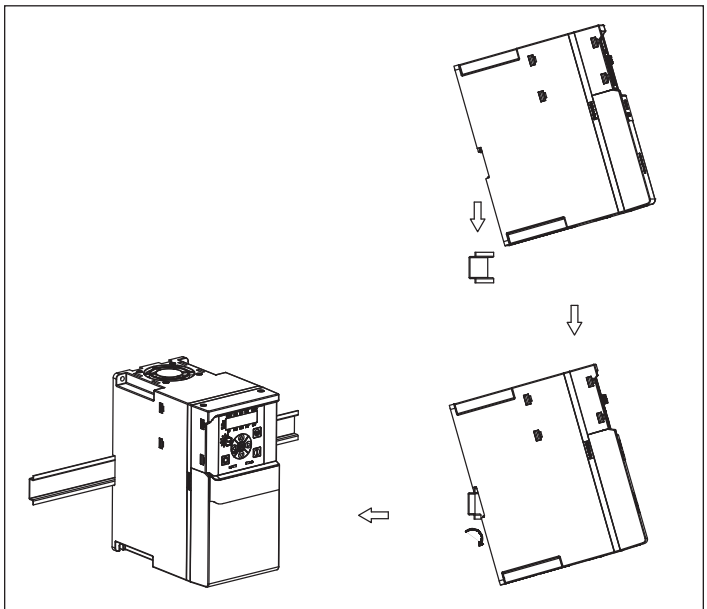

DIN Rail mounting

Step 3. (EMI version only):

The input wires (including 3 line wires and 1 input grounding wire) should run through the input magnetic core before connecting to input terminal block and grounding hole. Use a cable tie to tie the input magnetic cores to the input wires. The output wires (only 3 motor wires) should run through the output magnetic core before connecting to output terminal block.

The output grounding wire should not run through the output magnetic core. Use a cable tie to tie the output magnetic cores to the output wires. The maximum distance between input / output magnetic cores top surface and drive bottom surface is 100 mm (3.94 in.). The height of input magnetic core is bigger than output magnetic core for 3 phase FR2 EMI version, but they are the same for 1 phase FR2 EMI version.

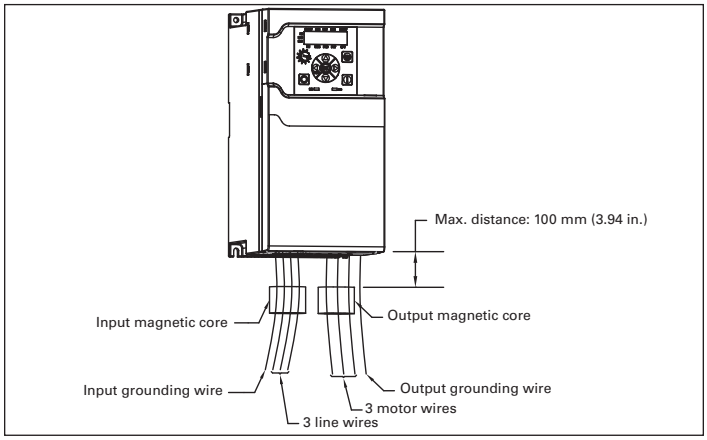

FR3 mounting instructions

Step 1.

Lift the drive out from the carton, remove the packaging. The magnetic cores and cable ties are only included in EMI version drive.

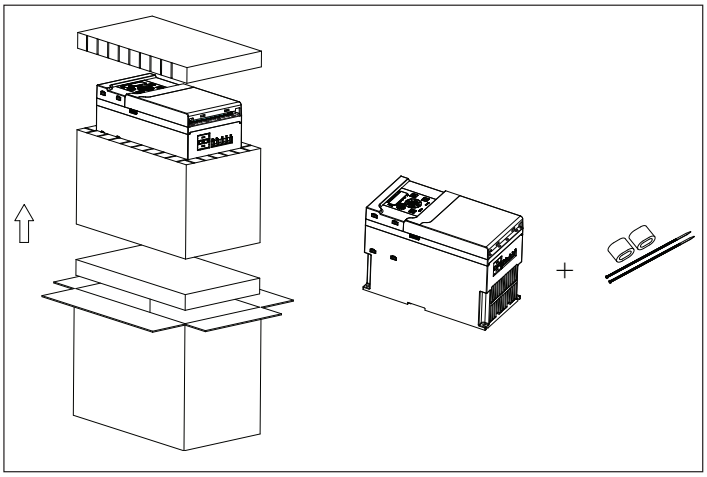

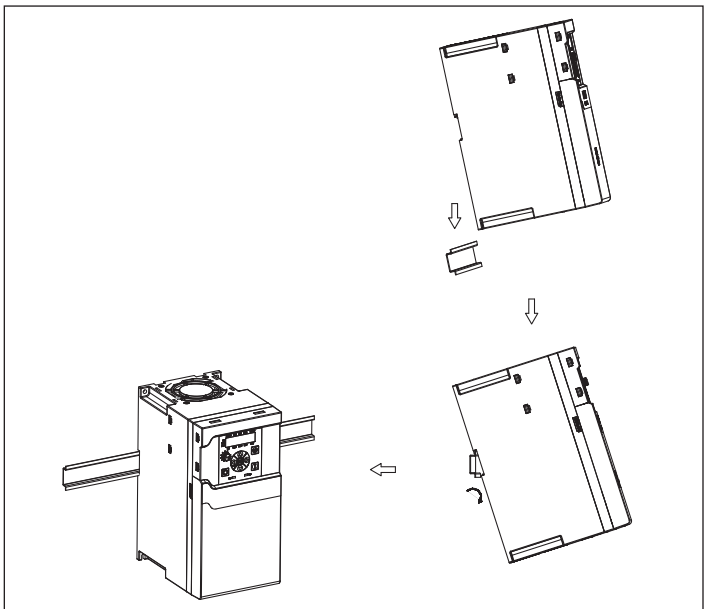

DIN Rail mounting

Step 2.

Screw mounting: Attach the drive to the mounting plate with four M5X20 (or 3/16 in.) screws and four M5 (or 3/16 in.) nuts. The opening dimension on the mounting plate should follow required dimension (refer to the dimension drawing in the instruction leaflet).

DIN Rail mounting: Lift the drive at an angle about 30 degrees. Align the top hooks of drive DIN rail mounting slot with DIN rail top edge. Push down and rotate the drive to clip the bottom hooks on the bottom DIN rail edge.

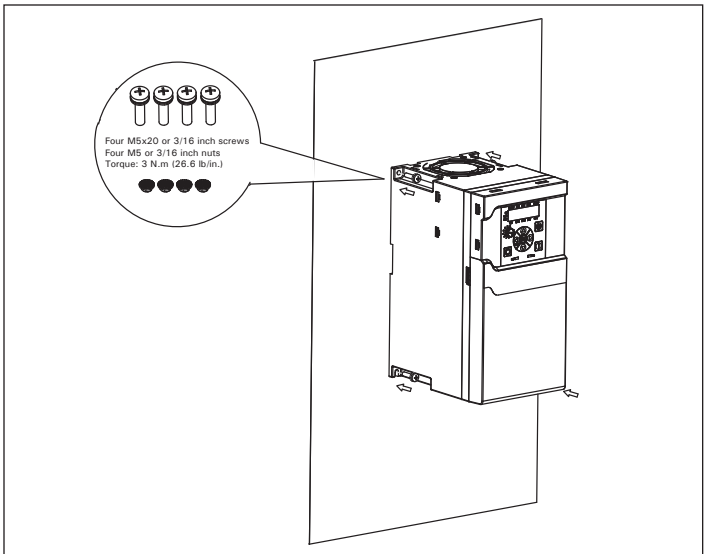

Screw mounting

Step 3. (EMI version only):

The input wires (including three line wires and one input grounding wire) should run through the input magnetic core before connecting to input terminal block and grounding hole. Use a cable tie to tie the input magnetic cores to the input wires.

For 3-phase FR3 EMI version, the output wires (only three motor wires) should run through the output magnetic core before connecting to output terminal block. The output grounding wire should not run through the output magnetic core. Use a cable tie to tie the output magnetic cores to the output wires. For 1-phase FR3 EMI version, there is no output magnetic core. The motor wires and output grounding wire can be connected to corresponding terminals directly.

The maximum distance between input / output magnetic cores top surface and drive bottom surface is 100 mm.

The input magnetic core and output magnetic core are the same for 3-phase FR3 EMI version.

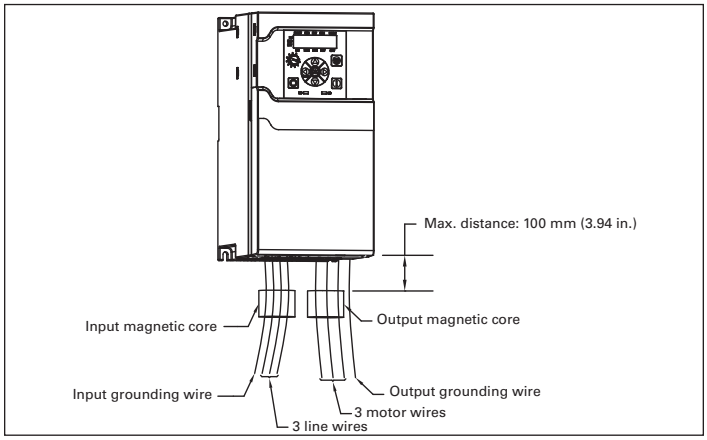

FR4 mounting instructions

Step 1.

Lift the drive out from the carton, remove the packaging. The magnetic cores and cable ties are only included in EMI version drive.

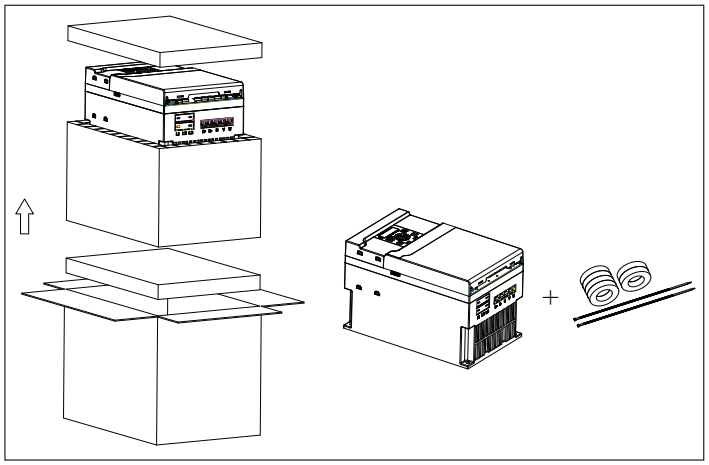

Step 2.

Screw mounting: Attach the drive to the mounting plate with four M5x20 (or 3/16 in.) screws and four M5 (or 3/16 in.) nuts. The opening dimension on the mounting plate should follow required dimension (refer to the dimension drawing in the instruction leaflet).

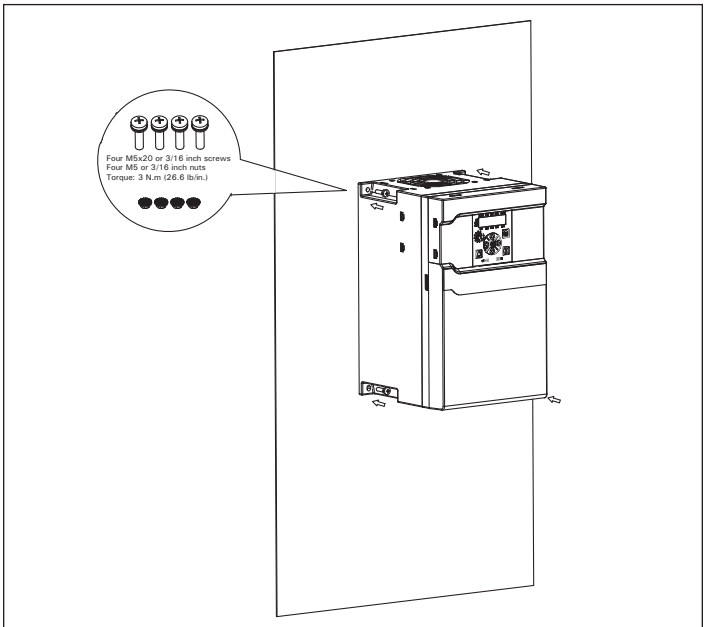

Screw mounting

Step 3. (EMI version only):

The input wires (including 3 line wires and 1 input grounding wire) should run through the input magnetic core before connecting to input terminal block and grounding hole. Use a cable tie to tie the input magnetic cores to the input wires. The output wires (only 3 motor wires) should run through the output magnetic core before connecting to output terminal block.

The output grounding wire should not run through the output magnetic core. Use a cable tie to tie the output magnetic cores to the output wires. The maximum distance between input / output magnetic cores top surface and drive bottom surface is 100 mm (3.94 in.). The height of input magnetic core is bigger than output magnetic core for FR4. .

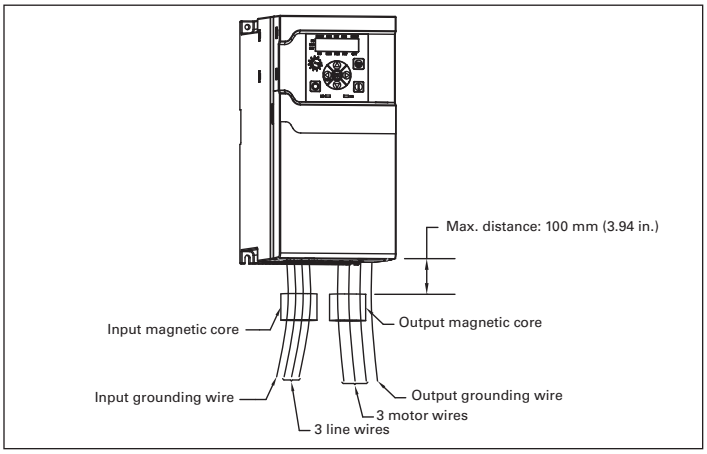

Mounting instruction for option cards

Step 1.

For enclosed type:

Remove the front cover (1) from NEMA 1 kit then remove the terminal cover (2) from drive.

For open type:

Only remove the terminal cover.

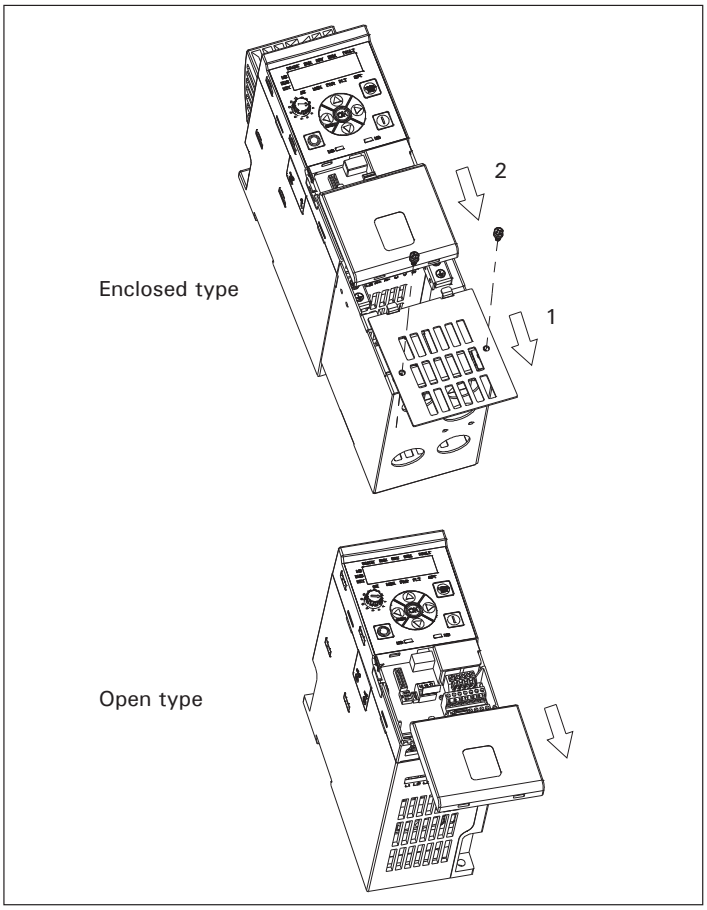

Step 2.

Remove the option card port label and four snap covers from the drive.

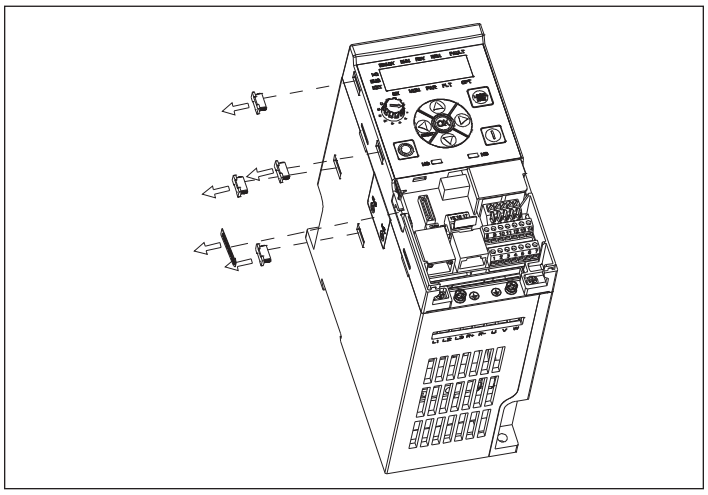

Step 3.

Connect the cable to option card connector (3) and MCU board connector (4).

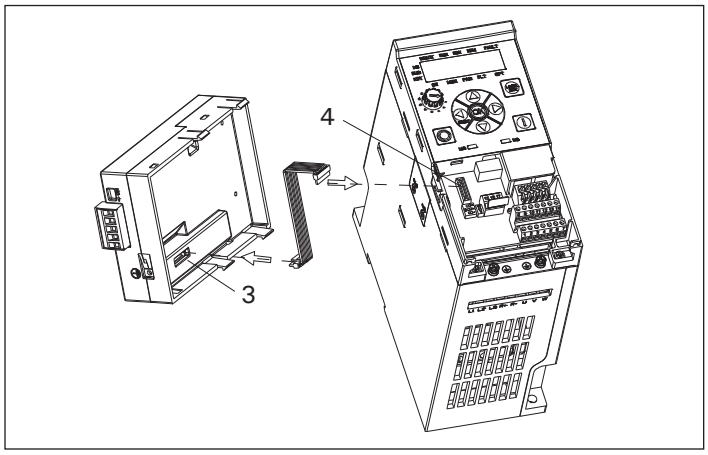

Step 4.

Clamp the cable with the optional card port. Mount the option card to the drive by inserting the four snaps into the slots on drive.

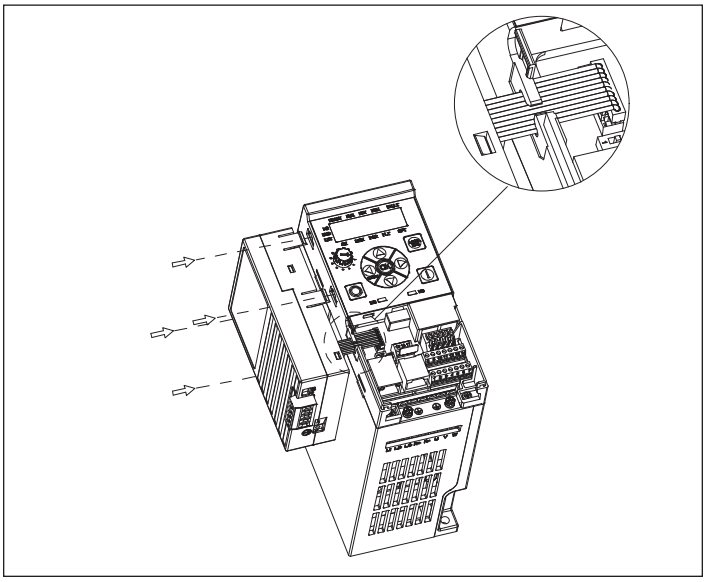

Step 5.

For enclosed type:

Install the terminal cover (1) to the drive then install the front cover (2) to NEMA 1 kit.

For open type:

Only install the terminal cover to the drive.

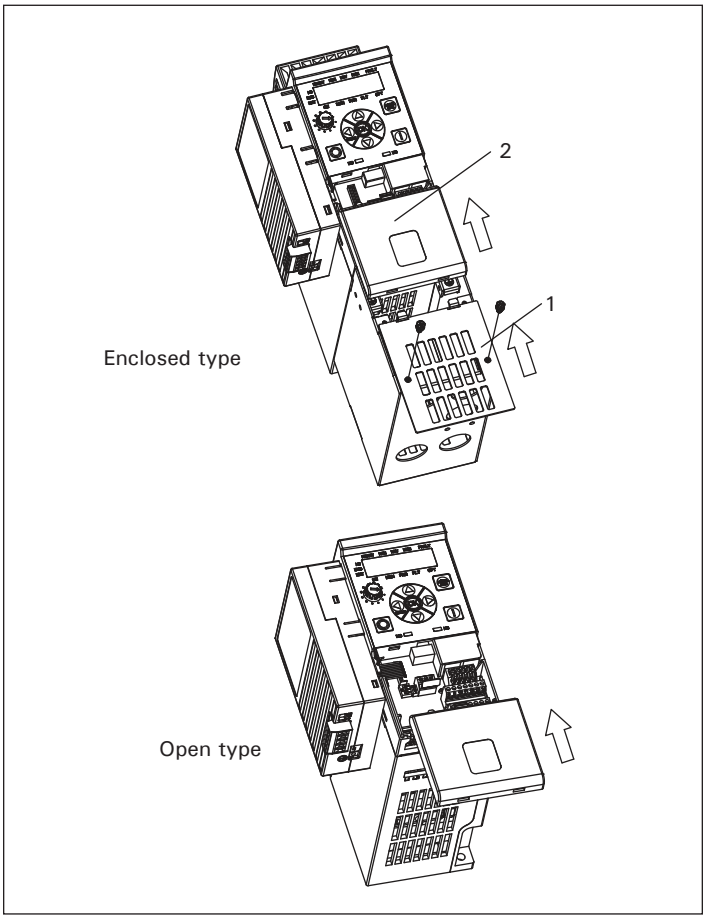

Wiring instruction.

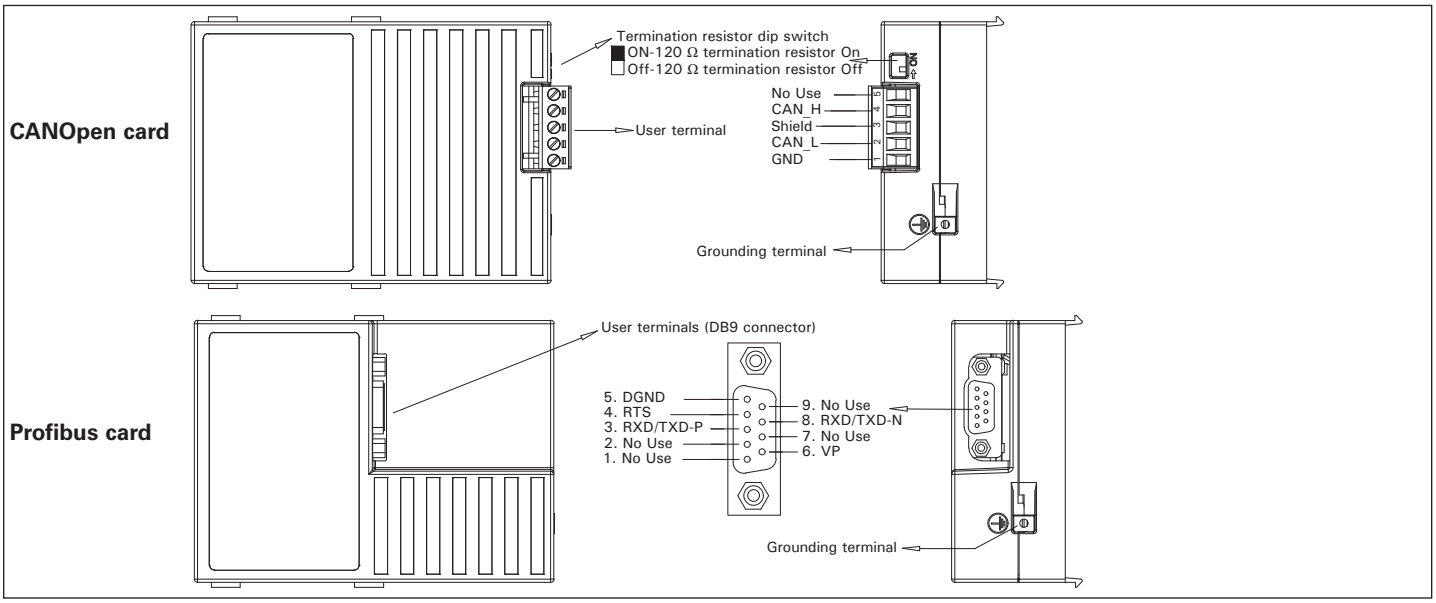

(en) *NOTICE*
Connect only in voltage-free state!

(de) *ACHTUNG*
Nur im spannungsfreien Zustand anschließen!

(fr) *ATTENTION*
Raccordez l'appareil uniquement hors tension !

(es) *CUIDADO*
¡Conectar únicamente en estado sin tensión!

(it) *AVVISO*
Collegare solo in assenza di tensione!

(zh) 注意
必须在断电状态下进行连接！

(ru) *ВНИМАНИЕ*
Подключать только в обесточенном состоянии!

(nl) *OPGELET*
Alleen in spanningsloze toestand aansluiten!

(da) *VIGTIGT*
Må kun tilsluttes i spændingsfri tilstand!

(el) *ΕΠΑΓΡΥΠΝΗΣΗ*
Συνδέστε μόνο όταν δεν επικρατεί τάση!

(pt) *ADVERTÊNCIA*
Ligar apenas com a tensão desligada!

(sv) *OBSERVERA*
Får endast anslutas i spänningsfritt tillstånd!

(fi) *ILMOITUS*
Kytke vain jännitteettömässä tilassa!

(cs) *UPOZORNĚNÍ*
Připojujte jen při zcela odpojeném napájení!

(et) *TÄHELEPANU*
Ühendada ainult pingevabas olekus!

(hu) *FIGYELEM*
Csak feszültségmentes állapotban csatlakoztassa!

(lv) *UZMANĪBU*
Pieslēgt tikai tad, kad nenotiek sprieguma padeve!

(lt) *DĖMESIO*
Prijungti tik tada, kai išjungta įtampa!

(pl) *UWAGA*
Podłączać zawsze po uprzednim odłączeniu od zasilania elektrycznego!

(sl) *POZOR*
Napravo priključite le, ko ni pod napetostjo!

(sk) *UPOZORNRNIE*
Napájat' len v stave bez napätia!

(bg) *ПРЕДУПРЕЖДЕНИЕ*
Свързвайте само, когато уреда не е под напрежение!

(ro) *ATENTJE*
Conectați doar când aparatul nu se află sub tensiune!

(hr) *POZOR*
Priključujte samo u beznaponskom stanju!

(tr) *BİLDİRİM*
Sadece gerilim sıfırken bağlayın!

(uk) *ПОВІДОМЛЕННЯ*
Підключати лише за відсутності напруги!

(ar) *ملاحظة*
التوصيل فقط في حال عدم الفولتية!

Ground wiring

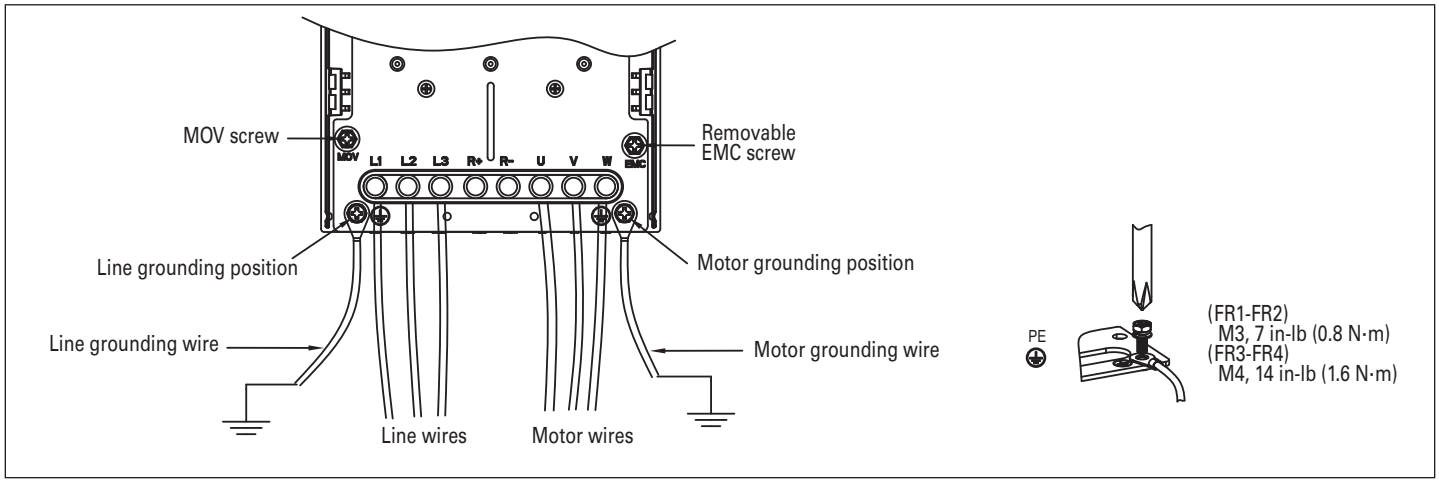

Input power and motor cable stripping lengths

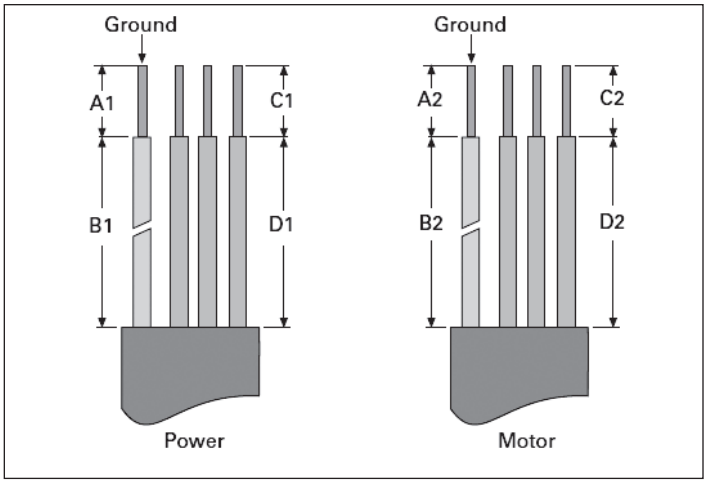

Table 3. Stripping lengths.

Frame size	Power wiring				Motor wiring			
	A1 in. (mm)	B1 in. (mm)	C1 in. (mm)	D1 in. (mm).	A2 in. (mm)	B2 in. (mm)	C2 in. (mm)	D2 in. (mm)
FR1	0.39 (10)	2.76 (70)	0.39 (10)	2.76 (70)	0.39 (10)	2.76 (70)	0.39 (10)	2.76 (70)
FR2	0.47 (12)	2.76 (70)	0.47 (12)	2.76 (70)	0.47 (12)	2.76 (70)	0.47 (12)	2.76 (70)
FR3	0.47 (12)	3.54 (90)	0.47 (12)	3.54 (90)	0.47 (12)	3.54 (90)	0.47 (12)	3.54 (90)
FR4	0.79 (20)	4.53 (115)	0.79 (20)	4.53 (115)	0.79 (20)	4.53 (115)	0.79 (20)	4.53 (115)

Note: For I/O / STO / Relay output wires, the stripping length = 0.236-0.276 in. (6-7 mm).

Table 4. Connection sizes and torques.①②

			Output rating		Size and torque						
Input voltage	Frame size	Drive catalog number	CT/IH current amps	VT/IL current amps	Power wire size AWG (mm2)	Power wire torque in.-lb (N·m)	Ground wire size AWG (mm2)	Ground wire torque in.-lb (N·m)	Control wire size AWG (mm2)	Control wire torque in.-lb (N·m) AI/DI ③	RO
100 Vac to 120 Vac 50/60 Hz 1 phase	FR1	DM1-111D6…	1.6	2.5	14 (2.5)	4.4 (0.5)	14 (2.5)	7.1 (0.8)	28-16 (0.5-1.5)	1.73 (0.2)	4.5 (0.5)
		DM1-113D0…	3	4.8	14 (2.5)	4.4 (0.5)	14 (2.5)	7.1 (0.8)	28-16 (0.5-1.5)	1.73 (0.2)	4.5 (0.5)
	FR2	DM1-114D8…	4.8	6.9	10 (6)	10.5 (1.2)	10 (6)	7.1 (0.8)	28-16 (0.5-1.5)	1.73 (0.2)	4.5 (0.5)
		DM1-116D9…	6.9	7.8	10 (6)	10.5 (1.2)	10 (6)	7.1 (0.8)	28-16 (0.5-1.5)	1.73 (0.2)	4.5 (0.5)
200 Vac to 240 Vac 50/60 Hz 1 phase	FR1	DM1-121D6…	1.6	2.5	14 (2.5)	4.4 (0.5)	14 (2.5)	7.1 (0.8)	28-16 (0.5-1.5)	1.73 (0.2)	4.5 (0.5)
		DM1-123D0…	3	4.8	14 (2.5)	4.4 (0.5)	14 (2.5)	7.1 (0.8)	28-16 (0.5-1.5)	1.73 (0.2)	4.5 (0.5)
		DM1-124D8…	4.8	7.8	14 (2.5)	4.4 (0.5)	14 (2.5)	7.1 (0.8)	28-16 (0.5-1.5)	1.73 (0.2)	4.5 (0.5)
	FR2	DM1-127D8…	7.8	11	10 (6)	10.5 (1.2)	10 (6)	7.1 (0.8)	28-16 (0.5-1.5)	1.73 (0.2)	4.5 (0.5)
		DM1-12011…	11	17.5	10 (6)	10.5 (1.2)	10 (6)	7.1 (0.8)	28-16 (0.5-1.5)	1.73 (0.2)	4.5 (0.5)
	FR3	DM1-12017…	17.5	25.3	8 (10)	10.5 (1.2)	8 (10)	14.2 (1.6)	28-16 (0.5-1.5)	1.73 (0.2)	4.5 (0.5)
200 Vac to 240 Vac 50/60 Hz 3 phase	FR1	DM1-321D6…	1.6	2.5	14 (2.5)	4.4 (0.5)	14 (2.5)	7.1 (0.8)	28-16 (0.5-1.5)	1.73 (0.2)	4.5 (0.5)
		DM1-323D0…	3	4.8	14 (2.5)	4.4 (0.5)	14 (2.5)	7.1 (0.8)	28-16 (0.5-1.5)	1.73 (0.2)	4.5 (0.5)
		DM1-324D8…	4.8	7.8	14 (2.5)	4.4 (0.5)	12 (2.5)	7.1 (0.8)	28-16 (0.5-1.5)	1.73 (0.2)	4.5 (0.5)
		DM1-327D8…	7.8	11	12 (4)	4.4 (0.5)	10 (4)	7.1 (0.8)	28-16 (0.5-1.5)	1.73 (0.2)	4.5 (0.5)
	FR2	DM1-32011…	11	17.5	10 (6)	10.5 (1.2)	10 (6)	7.1 (0.8)	28-16 (0.5-1.5)	1.73 (0.2)	4.5 (0.5)
		DM1-32017…	17.5	25.3	8 (10)	10.5 (1.2)	10 (10)	7.1 (0.8)	28-16 (0.5-1.5)	1.73 (0.2)	4.5 (0.5)
	FR3	DM1-32025…	25.3	32.2	8 (10)	10.5 (1.2)	8 (10)	14.2 (1.6)	28-16 (0.5-1.5)	1.73 (0.2)	4.5 (0.5)
	FR4	DM1-32032…	32.2	48.3	4 (25)	33 (3.73)	8 (16)	14.2 (1.6)	28-16 (0.5-1.5)	1.73 (0.2)	4.5 (0.5)
		DM1-32048…	48.3	62.1	3 (35)	33 (3.73)	6 (16)	14.2 (1.6)	28-16 (0.5-1.5)	1.73 (0.2)	4.5 (0.5)

Table 4. Connection sizes and torques(Continued).①②

			Output rating		Size and torque						
Input voltage	**Frame size**	**Drive catalog number**	**CT/IH current amps**	**VT/IL current amps**	**Power wire size AWG (mm2)**	**Power wire torque in.-lb (N·m)**	**Ground wire size AWG (mm2)**	**Ground wire torque in.-lb (N·m)**	**Control wire size AWG (mm2)**	**Control wire torque in.-lb (N·m) AI/DI ③**	**RO**
380 Vac to 480 Vac 50/60 Hz 3 phase	FR1	DM1-341D5…	1.5	2.2	14 (2.5)	4.4 (0.5)	14 (2.5)	7.1 (0.8)	28-16 (0.5-1.5)	1.73 (0.2)	4.5 (0.5)
		DM1-342D2…	2.2	4.3	14 (2.5)	4.4 (0.5)	14 (2.5)	7.1 (0.8)	28-16 (0.5-1.5)	1.73 (0.2)	4.5 (0.5)
		DM1-344D3…	4.3	5.6	14 (2.5)	4.4 (0.5)	14 (2.5)	7.1 (0.8)	28-16 (0.5-1.5)	1.73 (0.2)	4.5 (0.5)
		DM1-345D6…	5.6	7.6	14 (2.5)	4.4 (0.5)	10 (2.5)	7.1 (0.8)	28-16 (0.5-1.5)	1.73 (0.2)	4.5 (0.5)
	FR2	DM1-347D6…	7.6	12	12 (4)	10.5 (1.2)	10 (4)	7.1 (0.8)	28-16 (0.5-1.5)	1.73 (0.2)	4.5 (0.5)
		DM1-34012…	12	16	10 (6)	10.5 (1.2)	10 (6)	7.1 (0.8)	28-16 (0.5-1.5)	1.73 (0.2)	4.5 (0.5)
		DM1-34016…	16	23	8 (10)	10.5 (1.2)	10 (10)	7.1 (0.8)	28-16 (0.5-1.5)	1.73 (0.2)	4.5 (0.5)
	FR3	DM1-34023..	23	31	8 (10)	10.5 (1.2)	8 (10)	14.2 (1.6)	28-16 (0.5-1.5)	1.73 (0.2)	4.5 (0.5)
	FR4	DM1-34031…	31	38	6 (16)	33 (3.73)	8 (16)	14.2 (1.6)	28-16 (0.5-1.5)	1.73 (0.2)	4.5 (0.5)
		DM1-34038…	38	46	4 (25)	33 (3.73)	8 (16)	14.2 (1.6)	28-16 (0.5-1.5)	1.73 (0.2)	4.5 (0.5)
525 Vac to 600 Vac 50/60 Hz 3 phase	FR2	DM1-351D7…	1.7	2.7	12 (4)	10.5 (1.2)	10 (4)	7.1 (0.8)	28-16 (0.5-1.5)	1.73 (0.2)	4.5 (0.5)
		DM1-352D7…	2.7	4.5	12 (4)	10.5 (1.2)	10 (4)	7.1 (0.8)	28-16 (0.5-1.5)	1.73 (0.2)	4.5 (0.5)
		DM1-354D5…	4.5	7.5	12 (4)	10.5 (1.2)	10 (4)	7.1 (0.8)	28-16 (0.5-1.5)	1.73 (0.2)	4.5 (0.5)
		DM1-357D5…	7.5	10	12 (4)	10.5 (1.2)	10 (4)	7.1 (0.8)	28-16 (0.5-1.5)	1.73 (0.2)	4.5 (0.5)
		DM1-35010…	10	13.5	12 (4)	10.5 (1.2)	10 (4)	7.1 (0.8)	28-16 (0.5-1.5)	1.73 (0.2)	4.5 (0.5)
	FR3	DM1-35013…	13.5	18	8 (10)	10.5 (1.2)	8 (10)	14.2 (1.6)	28-16 (0.5-1.5)	1.73 (0.2)	4.5 (0.5)
	FR4	DM1-35018…	18	22	6 (16)	33 (3.73)	8 (16)	14.2 (1.6)	28-16 (0.5-1.5)	1.73 (0.2)	4.5 (0.5)
		DM1-35022…	22	27	4 (25)	33 (3.73)	8 (16)	14.2 (1.6)	28-16 (0.5-1.5)	1.73 (0.2)	4.5 (0.5)

Notes:
① Strip the motor and power cables as shown above.
② Both UL® and IEC tools may be used.
③ Applies to strained wire, solid wire, or ferrule installations.

Cable and fuse guidelines

Table 5. North America cable and fuse sizes. ①②

UL cable and fuse sizes

			Output rating		Input rating		UL application									
Input voltage	Frame size	Drive catalog number	CT/IH current amps	VT/IL current amps	CT/IH current amps	VT/IL current amps	Recommended fuse rating (Class J, T, CF or CC) 100 kAIC①	Maximum allowed fuse rating (Class J, T, CF or CC) 100 kAIC①	Recommended inverse-time molded-case circuit breaker rating 100 kAIC (open type only for 3 phase)①	Maximum allowed inverse-time molded-case circuit breaker rating 100 kAIC (open type only for 3 phase)①	Maximum allowed miniature circuit breaker rating 10/14 kAIC①	Recommended Type E CMC rating 65 kAIC②	NEC wire size line and motor AWG	NEC wire size ground AWG	Terminal size line and motor AWG	Terminal size ground AWG
100 Vac to 120 Vac 50/60 Hz 1 phase	FR1	DM1-111D6…	1.6	2.5	6.4	9.6	15	30	15	30	30	\	14	10	18-8	16-8
		DM1-113D0…	3	4.8	12	20	30	70	30	70	63	\	10	8	18-8	16-8
	FR2	DM1-114D8…	4.8	6.9	20	29	40	90	40	90	63	\	8	8	20-6	12-6
		DM1-116D9…	6.9	7.8	29	34.3	45	125	45	125	63	\	8	6	20-6	12-6
200 Vac to 240 Vac 50/60 Hz 1 phase	FR1	DM1-121D6…	1.6	2.5	3.2	5	10	15	15	15	15	\	14	14	18-8	16-8
		DM1-123D0…	3	4.8	6	9.6	20	30	20	30	30	\	14	10	18-8	16-8
		DM1-124D8…	4.8	7.8	10	16	30	60	30	60	63	\	10	8	18-8	16-8
	FR2	DM1-127D8…	7.8	11	16	23	35	80	35	80	63	\	10	8	20-6	12-6
		DM1-12011…	11	17.5	23	35	60	125	60	125	63	\	8	6	20-6	12-6
	FR3	DM1-12017…	17.5	25.3	39.6	49.6	80	200	80	200	\	\	6	6	20-6	8-6
200 Vac to 240 Vac 50/60 Hz 3 phase	FR1	DM1-321D6…	1.6	2.5	2.1	3.3	6	6	15	15	5	6.3	14	14	18-8	16-10
		DM1-323D0…	3	4.8	3.9	5.8	10	15	15	15	10	6.3	14	14	18-8	16-10
		DM1-324D8…	4.8	7.8	5.8	9.4	15	20	15	15	15	10	14	12	18-8	16-10
		DM1-327D8…	7.8	11	9.4	13.2	20	30	20	20	20	16	12	10	18-8	16-10
	FR2	DM1-32011…	11	17.5	12.7	20.1	35	40	30	30	30	25	10	10	20-6	12-8
		DM1-32017…	17.5	25.3	20.1	29.1	45	60	45	45	40	32	8	10	20-6	12-8
	FR3	DM1-32025…	25.3	32.2	29.1	37	60	70	50	50	50	40	8	8	20-6	10-8
	FR4	DM1-32032…	32.2	48.3	35.4	53.1	80	100	80	80	\	\	4	8	20-2	8-6
		DM1-32048…	48.3	62.1	53.1	68.3	110	125	100	100	\	\	3	6	20-2	8-6
380 Vac to 480 Vac 50/60 Hz 3 phase	FR1	DM1-341D5…	1.5	2.2	1.8	2.6	6	6	15	15	4	6.3	14	14	18-8	16-10
		DM1-342D2…	2.2	4.3	2.6	5.2	10	10	15	15	8	6.3	14	14	18-8	16-10
		DM1-344D3…	4.3	5.6	5.2	6.7	15	15	15	15	10	10	14	14	18-8	16-10
		DM1-345D6…	5.6	7.6	6.7	9.1	15	30	15	15	15	10	14	10	18-8	16-10
	FR2	DM1-347D6…	7.6	12	9.1	14.4	25	30	20	20	20	16	12	10	20-6	12-8
		DM1-34012…	12	16	14.4	19.2	30	40	30	30	25	25	10	10	20-6	12-8
		DM1-34016…	16	23	19.2	27.6	45	60	40	40	32	32	8	10	20-6	12-8
	FR3	DM1-34023..	23	31	26.5	35.7	60	70	50	50	\	40	8	8	20-6	10-8
	FR4	DM1-34031…	31	38	35.7	43.7	70	70	70	70	\	50	6	8	20-2	8-6
		DM1-34038…	38	46	43.7	52.9	80	80	80	80	\	58	4	8	20-2	8-6
525 Vac to 600 Vac 50/60 Hz 3 phase	FR2	DM1-354D5…	4.5	7.5	6	9	15	30	\	\	\	10	14	10	20-6	12-8
		DM1-357D5…	7.5	10	9	12	20	40	\	\	\	16	14	10	20-6	12-8
		DM1-35010…	10	13.5	12	16.2	25	50	\	\	\	25	10	10	20-6	12-8
	FR3	DM1-35013…	13.5	18	16.2	21.6	35	70	\	\	\	25	10	8	20-6	10-8
	FR4	DM1-35018…	18	22	21.6	26.4	40	80	\	\	\	32	8	8	20-2	8-6
		DM1-35022…	22	27	26.4	32.4	50	100	\	\	\	40	8	8	20-2	8-6

Notes:

① Line and motor cable size is selected according to UL 508C Table 40.3 for copper conductor rated 75°C. Use only with copper wire rated 75°C here. Size requirements for other different wire types are defined in the National Electrical Code®, ANSI/NFPA® 70.

② Earthing conductor size is determined by the maximum overcurrent device rating used ahead of the drive according to UL 508C Table 6.4.

③ If power cubes or bypass are used, a UL listed Class RK5, J, T or equivalent fuse is recommended.

Table 6. International cable and fuse sizes. ①②

IEC Cable and Fuse Sizes

			Output rating		Input rating		IEC application									
Input voltage	**Frame size**	**Catalog number**	**CT/IH current amps**	**VT/IL current amps**	**CT/IH current amps**	**VT/IL current amps**	**Recommended fuse rating 100 kAIC**	**Maximum allowed use rating 100 kAIC**	**Recommended circuit breaker rating 100 kAIC (open type only for 3 phase)**	**Maximum allowed circuit breaker rating 100 kAIC (open type only for 3 phase)**	**Maximum allowed miniature circuit breaker rating 10/14 kAIC**	**Recommended Type E CMC rating 65 kAIC**	**IEC cable size line and motor mm²**	**IEC cable size ground mm²**	**Terminal size line and motor mm²**	**Terminal size ground mm²**
100 Vac to 120 Vac 50/60 Hz 1 phase	FR1	DM1-111D6…	1.6	2.5	6.4	9.6	15	30	15	30	30	\	2.5	2.5	0.2-6	TBD
		DM1-113D0…	3	4.8	12	20	30	70	30	70	63	\	6	6	0.2-6	TBD
	FR2	DM1-114D8…	4.8	6.9	20	29	40	90	40	90	63	\	10	10	0.5-16	TBD
		DM1-116D9…	6.9	7.8	29	34.3	45	125	45	125	63	\	10	10	0.5-16	TBD
200 Vac to 240 Vac 50/60 Hz 1 phase	FR1	DM1-121D6…	1.6	2.5	3.2	5	10	15	15	15	15	\	2.5	2.5	0.2-6	TBD
		DM1-123D0…	3	4.8	6	9.6	20	30	20	30	30	\	2.5	2.5	0.2-6	TBD
		DM1-124D8…	4.8	7.8	10	16	30	60	30	60	63	\	4	4	0.2-6	TBD
	FR2	DM1-127D8…	7.8	11	16	23	35	80	35	80	63	\	6	6	0.5-16	TBD
		DM1-12011…	11	17.5	23	35	60	125	60	125	63	\	10	10	0.5-16	TBD
	FR3	DM1-12017…	17.5	25.3	39.6	49.6	80	200	80	200	\	\	16	16	0.5-16	TBD
200 Vac to 240 Vac 50/60 Hz 3 phase	FR1	DM1-321D6…	1.6	2.5	2.1	3.3	6	6	15	15	5	6.3	2.5	2.5	0.2-6	1.5-6.0
		DM1-323D0…	3	4.8	3.9	5.8	10	15	15	15	10	6.3	2.5	2.5	0.2-6	1.5-6.0
		DM1-324D8…	4.8	7.8	5.8	9.4	15	20	15	15	15	10	2.5	2.5	0.2-6	1.5-6.0
		DM1-327D8…	7.8	11	9.4	13.2	20	30	20	20	20	16	4	4	0.2-6	1.5-6.0
	FR2	DM1-32011…	11	17.5	12.7	20.1	35	40	30	30	30	25	6	6	0.5-16	4.0-10
		DM1-32017…	17.5	25.3	20.1	29.1	45	60	45	45	40	32	10	10	0.5-16	4.0-10
	FR3	DM1-32025…	25.3	32.2	29.1	37	60	70	50	50	50	40	10	10	0.5-16	6.0-10
	FR4	DM1-32032…	32.2	48.3	35.4	53.1	80	100	80	80	\	\	25	16	0.5-35	10-16
		DM1-32048…	48.3	62.1	53.1	68.3	110	125	100	100	\	\	35	16	0.5-35	10-16
380 Vac to 480 Vac 50/60 Hz 3 phase	FR1	DM1-341D5…	1.5	2.2	1.8	2.6	6	6	15	15	4	6.3	2.5	2.5	0.2-6	1.5-6.0
		DM1-342D2…	2.2	4.3	2.6	5.2	10	10	15	15	8	6.3	2.5	2.5	0.2-6	1.5-6.0
		DM1-344D3…	4.3	5.6	5.2	6.7	15	15	15	15	10	10	2.5	2.5	0.2-6	1.5-6.0
		DM1-345D6…	5.6	7.6	6.7	9.1	15	30	15	15	15	10	2.5	2.5	0.2-6	1.5-6.0
	FR2	DM1-347D6…	7.6	12	9.1	14.4	25	30	20	20	20	16	4	4	0.5-16	4.0-10
		DM1-34012…	12	16	14.4	19.2	30	40	30	30	25	25	6	6	0.5-16	4.0-10
		DM1-34016…	16	23	19.2	27.6	45	60	40	40	32	32	10	10	0.5-16	4.0-10
	FR3	DM1-34023..	23	31	26.5	35.7	60	70	50	50	\	40	10	10	0.5-16	6.0-10
	FR4	DM1-34031…	31	38	35.7	43.7	70	70	70	70	\	50	16	16	0.5-35	10-16
		DM1-34038…	38	46	43.7	52.9	80	80	80	80	\	58	25	16	0.5-35	10-16
525 Vac to 600 Vac 50/60 Hz 3 phase	FR2	DM1-354D5…	4.5	7.5	6	9	15	30	\	\	\	10	2.5	2.5	0.5-16	2.5-10
		DM1-357D5…	7.5	10	9	12	20	40	\	\	\	16	2.5	2.5	0.5-16	2.5-10
		DM1-35010…	10	13.5	12	16.2	25	50	\	\	\	25	6	6	0.5-16	4-10
	FR3	DM1-35013…	13.5	18	16.2	21.6	35	70	\	\	\	25	6	6	0.5-16	6-10
	FR4	DM1-35018…	18	22	21.6	26.4	40	80	\	\	\	32	10	10	0.5-35	10-16
		DM1-35022…	22	27	26.4	32.4	50	100	\	\	\	40	10	10	0.5-35	10-16

Notes:

① Line and motor cable size is selected according to IEC 60364-5-52:2009 Table B.52.4 for copper conductor with PVC insulation with a wiring condition of ambient temperature 30°C in air and an installation method of "B2" (cables in conduit and cable trunking systems). For other wiring conditions, please refer to the standard of IEC 60364-5-52:2009 for suitable cable sizes.

② Earthing conductor size is determined by the cross-sectional area of phase conductors according to IEC/EN 61800-5-1:2007 Table 5. So if phase conductor size is changed, earthing conductor size should also be changed accordingly.

③ If power cubes or bypass are used, a Class gG/gL fuse is recommended.

Installation overview for DM1

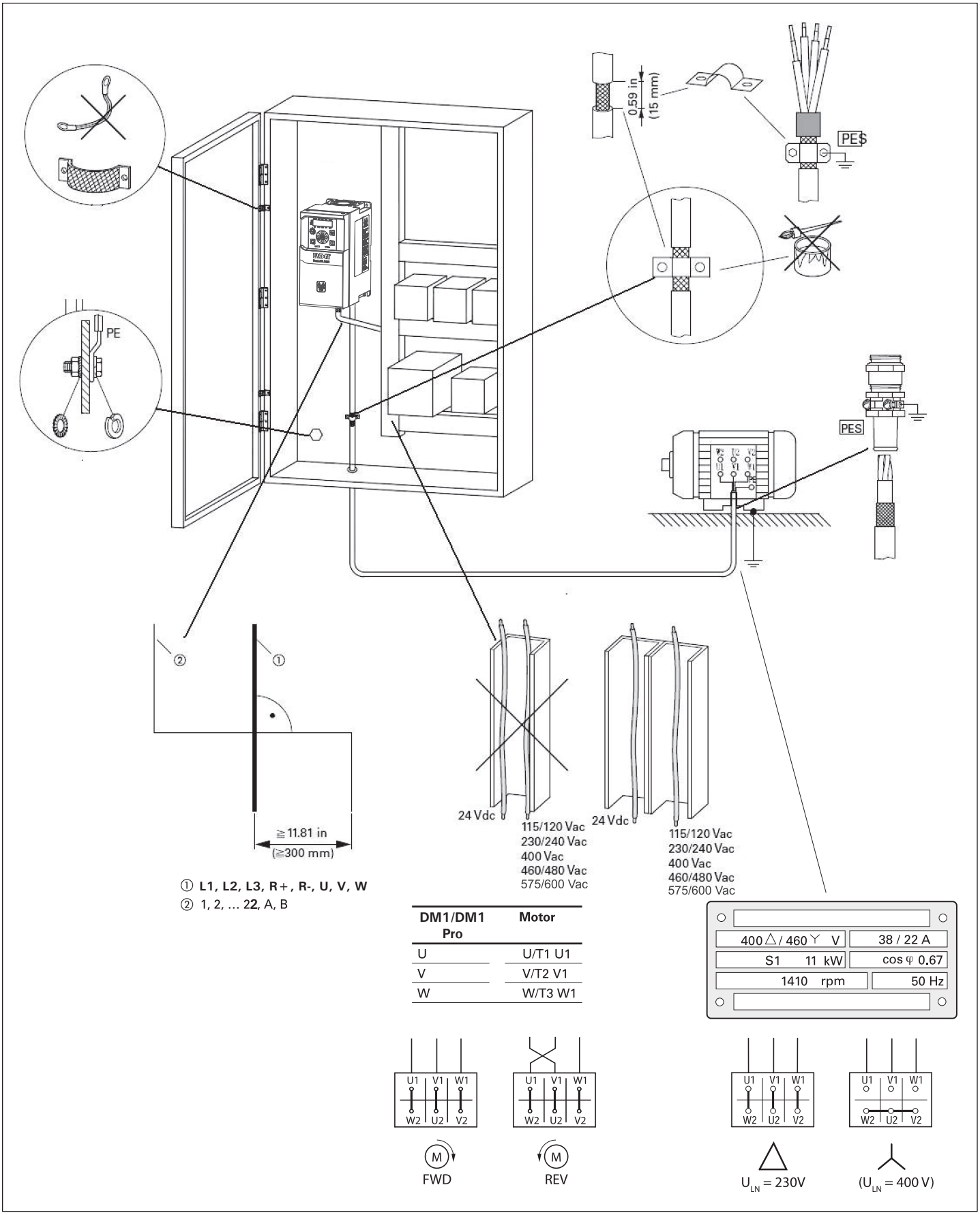

DM1/DM1 Pro	Motor
U	U/T1 U1
V	V/T2 V1
W	W/T3 W1

Control board layout

DM1 Pro face plate

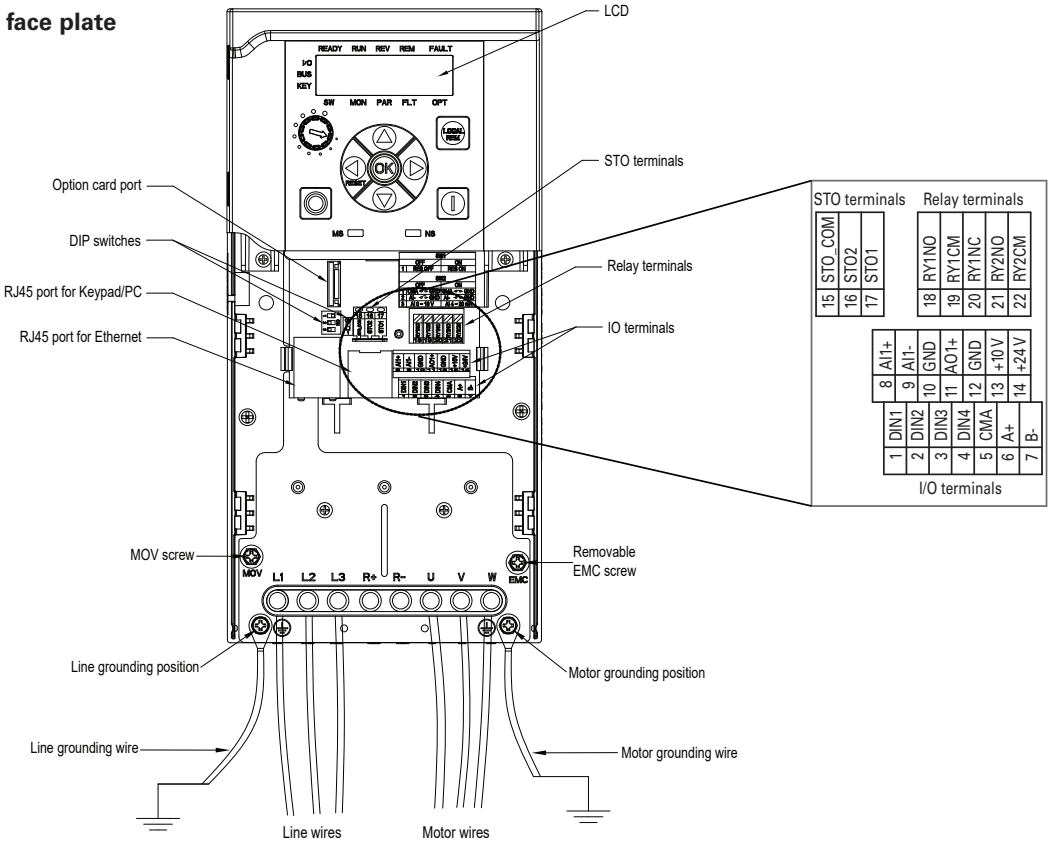

DM1 face plate

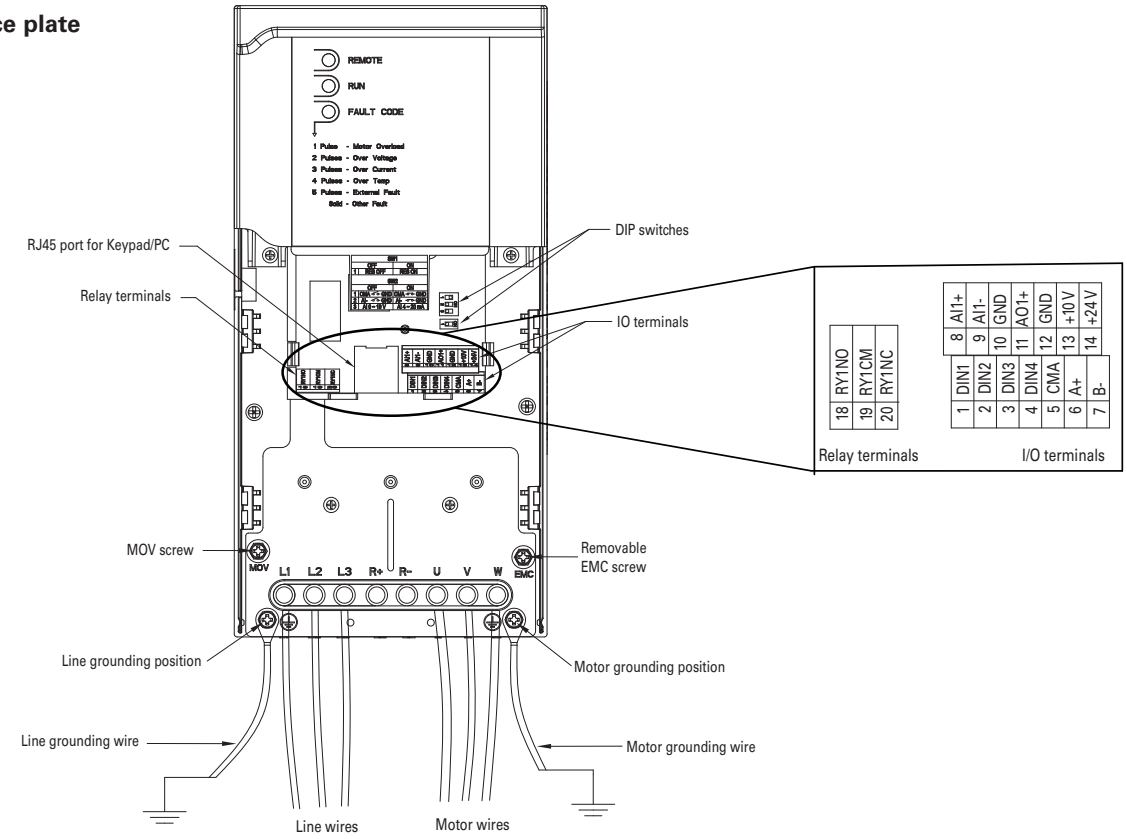

Factory-set control terminal functions

Table 7. I/O connection.

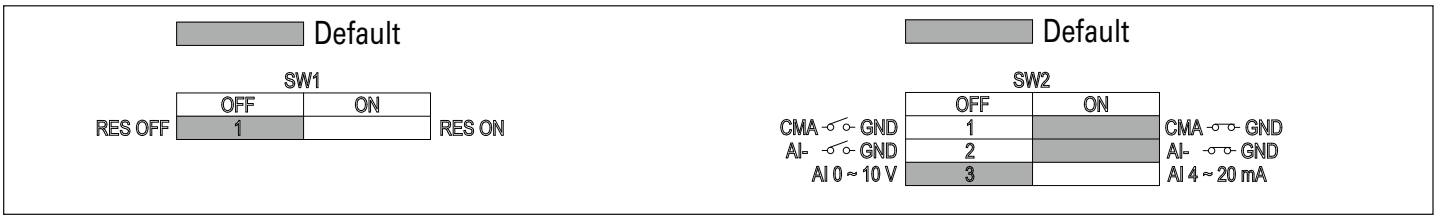

DM1

External wiring	Terminal	Short name	Name	Default setting	Description
	1	DI1	Digital input 1	Run forward	Starts the motor in the forward direction.
	2	DI2	Digital input 2	Run reverse	Start the motor in the reverse direction.
	3	DI3	Digital input 3	External fault	Triggers a fault in the drive.
	4	DI4	Digital input 4	Fault reset	Resets active faults in the drive.
	5	CMA	DI1 to DI4 common	Grounded	Allows for sourced input.
	6	A	RS-485 signal A	—	Fieldbus communication (Modbus RTU, BACNet).
	7	B	RS-485 signal B	—	Fieldbus communication (Modbus RTU, BACNet).
Res	8	AI1+ ①	Analog input 1	0 - 10 V	Voltage speed reference (programmable to 4 mA to 20 mA).
	9	AI1-	Analog input 1 ground	—	Analog input 1 common (ground).
	10	GND	I/O signal ground	—	I/O ground for reference and control.
	11	AO1+	Analog output 1	Output frequency	Shows output frequency to motor 0 - 60 Hz (4 mA to 20 mA).
	12	GND	I/O signal ground	—	I/O ground for reference and control.
	13	10 V	10 Vdc reference output	10.3 Vdc +/- 3%	10 Vdc reference voltage.
	14	24 V	24 Vdc control output	24 Vdc In/Out	Control voltage input/output (100 mA max.).
	18	R1NO	Relay 1 normally open	Run	Changes state when the drive is in the run state.
	19	R1CM	Relay 1 common		
	20	R1NC	Relay 1 normally closed		

Table 7. I/O connection (continued).

DM1 PRO

External wiring	Terminal	Short name	Name	Default setting	Description
	1	DI1	Digital input 1	Run forward	Starts the motor in the forward direction.
	2	DI2	Digital input 2	Run reverse	Start the motor in the reverse direction.
	3	DI3	Digital input 3	External fault	Triggers a fault in the drive.
	4	DI4	Digital input 4	Fault reset	Resets active faults in the drive.
	5	CMA	DI1 to DI4 common	Grounded	Allows for sourced input.
	6	A	RS-485 signal A	—	Fieldbus communication (Modbus RTU, BACNet).
	7	B	RS-485 signal B	—	Fieldbus communication (Modbus RTU, BACNet).
Res	8	AI1+ ①	Analog input 1	0 - 10 V	Voltage speed reference (programmable to 4 mA to 20 mA).
	9	AI1-	Analog input 1 ground	—	Analog input 1 common (ground).
	10	GND	I/O signal ground	—	I/O ground for reference and control.
	11	AO1+	Analog output 1	Output frequency	Shows output frequency to motor 0 - 60 Hz (4 mA to 20 mA).
	12	GND	I/O signal ground	—	I/O ground for reference and control.
	13	10 V	10 Vdc reference output	10.3 Vdc +/- 3%	10 Vdc reference voltage.
	14	24 V	24 Vdc control output	24 Vdc In/Out	Control voltage input/output (100 mA max.).
	15	STO_com	Safe torque common	—	Safe torque Off common.
	16	STO2	Safe torque Off 2	—	Safe torque Off 2 input.
	17	STO1	Safe torque Off 1	—	Safe torque Off 1 input.
	18	R1NO	Relay 1 normally open	Run	Changes state when the drive is in the run state.
	19	R1CM	Relay 1 common		
	20	R1NC	Relay 1 normally closed		
	21	R2NO	Relay 2 normally open	Fault	Changes state when the drive is in the fault state.
	22	R2CM	Relay 2 common		

Notes:

The above wiring demonstrates a SINK configuration. The SW2 position 1 is set to ON. If a SOURCE configuration is desired, wire 24 V to CMA and close the inputs to ground. When using the +10 V for AI1, SW2 position 2 set to ON.

① AI1+ support 10 K potentiometer.

(en) **CAUTION**

In the territory of the EU Directive the frequency-controlled devices and their accessories must be taken into operation only when the machine has been determined to fulfill the protection requirements of Machinery Directive 2006/42/EC.

Ensure EMC-compliant installation. Lay control and communication cables spatially separated from the motor cable. Ensure a large contact area connection between PES cable screen and PE.

(de) **VORSICHT**

Im Geltungsbereich der EG-Richtlinien dürfen die frequenzgesteuerten Geräte und deren Zubehör nur dann in Betrieb genommen werden, wenn festgestellt wird, dass die Maschine die Schutzanforderungen der Maschinenrichtlinie 2006/42/EG erfüllt.

EMV-gerechter Aufbau. Steuer- und Netzleitungen räumlich getrennt von der Motorleitung verlegen. PES Leitungsschirm großflächig mit PE verbinden.

(fr) **AVERTISSEMENT**

En application des directives européennes, les convertisseurs de fréquence et leurs accessoires ne doivent être mis en service que s'il a été vérifié que la machine répond aux exigences de la directive machines 2006/42/CE.

Montage conforme aux règles de la CEM. Eloigner les câbles de commande et de réseau des câbles puissance. Relier le blindage PES au PE en assurant de grandes surfaces de contact.

(es) **ATENCIÒN**

En el campo de aplicación de la normativa CE, los dispositivos controlados por frecuencia y sus correspondientes accesorios sólo deberán ponerse en marcha cuando se asegure que la máquina cumple con las exigencias de seguridad de la normativa de máquinas 2006/42/CE.
El montaje debe cumplir CEM. Los cables de mando y de conexión a red se deben instalar independientemente del cable de conexión al motor. El cable apantallado PES se debe conectar a masa utilizando una amplia superficie de contacto.

(it) **ATTENZIONE**

Nel campo di validità delle direttive CE, gli apparecchi a controllo di frequenza e i loro accessori possono essere messi in esercizio soltanto se si verifica che la macchina soddisfa i requisiti di sicurezza della direttiva macchine 2006/42/CE

Montaggio secondo CEM. Disporre i cavi comandi e di alimentazione separati dal cavo del motore. Collegare lo schermo del cavo PES con PE con un'ampia superficie.

(zh) **小心**

根据欧盟设备一致性规范，安装频率控制设备及其配件时，
应确保设备满足机器规范 2006/42/EG 中关于设备保护的要求。

PES 按照电磁兼容规范正确安装。应将控制电缆和电源电缆与电机电缆分开。
大面积采用 PE 包裹电缆。

(ru) **ОСТОРОЖНО**

В сфере действия директив ЕС устройства с частотным управлением и их оснащение должны вводиться в эксплуатацию только в том случае, если установлено, что данное оборудование соответствует требованиям по защите Директивы о машинном оборудовании 2006/42/EC.
Сборка соответственно электромагнитной совместимости. Линии управления и электросети прокладывать в пространственном отношении отдельно от линии двигателя. PES силовой экран соединять с PE по большой площади.

(nl) **VOORZICHTIG**

Binnen het geldigheidsgebied van de EC-richtlijnen mogen de frequentiegeregelde apparaten en de toebehoren daarvan alleen in bedrijf worden genomen, wanneer wordt vastgesteld, dat de machine aan de veiligheidseisen van de machinerichtlijn 2006/42/EG voldoet.

EMC-conforme constructie. Besturings- en netkabels ruimtelijk gescheiden van de motorkabel leggen. PES Kabelafscherming over groot oppervlak met PE verbinden.

(da) **FORSIGTIG**

I det område, hvor EF-direktiverne er gældende, må det frekvensstyrede udstyr og dets tilbehør kun tages i anvendelse, hvis det konstateres, at maskinen opfylder beskyttelseskravene i maskindirektivet 2006/42/EF.

EMC-korrekt installation. Træk styre- og netledninger rumligt adskilt fra motorledningen. PES Sørg for en stor kontaktflade mellem PES ledningsafskærmning og PE.

(el) **ΠΡΟΣΟΧΗ**

Στο πεδίο εφαρμογής των οδηγιών της ΕΚ, οι ελεγχόμενες μέσω συχνότητας συσκευές και τα παρελκόμενά τους επιτρέπεται να τίθενται σε λειτουργία μόνο εφόσον διαπιστωθεί ότι το μηχάνημα πληροί τις απαιτήσεις προστασίας της οδηγίας της ΕΚ για τα μηχανήματα 2006/42/ΕΚ. Κατασκευή σύμφωνα με τις απαιτήσεις ΗΜΣ. Εγκαθιστάτε τους αγωγούς ελέγχου και δικτύου ανεξάρτητα από τον αγωγό του κινητήρα. PES Συνδέετε τη θωράκιση των αγωγών σε μεγάλη επιφάνεια με τη γείωση.

(pt) **CUIDADO**

No âmbito das directivas da CE, os aparelhos comandados por frequência e os respectivos acessórios só podem ser postos em operação se for comprovado que a máquina atende às exigências de protecção da directiva de máquinas 2006/42/CE.
Estrutura com compatibilidade electromagnética. Dispor os fios de comando e de rede separados do fio do motor. Ligar uma área grande da blindagem do cabo PES. com o PE.

(sv) **FÖRSIKTIG**

I giltighetsområdet för EG-direktiven får de frekvensstyrda apparaterna och deras tillbehör endast tagas i drift när man fastställt att maskinen uppfyller skyddskraven i maskindirektiv 2006/42/EG.

EMC-anpassad uppbyggnad. Styr- och nätledningar dras avskilda från motorledningarna. PES Förbind ledningsskärm över ett brett område med PE.

(fi) **HUOMIO**

EU-direktiivien voimassaoloalueella taajuusohjatut laitteet ja niiden varusteet saa ottaa käyttöön vain silloin, kun todetaan, että kone täyttää konedirektiivin 2006/42/EY suojausvaatimukset.
EMC-mukainen rakenne. Ohjaus- ja verkkojohdot on asennettava tilaulotteisesti erotettuina. Johdonsuoja on liitettävä laajasti maadoitukseen PES.

(cs) **POZOR**

V rozsahu platnosti směrnic ES smí být frekvenčně řízené přístroje a jejich příslušenství uvedeny do provozu jedině tehdy, pokud je zjištěno, že stroj splňuje požadavky ochrany stanovené směrnicí 2006/42/ES o strojních zařízeních.
Nástavba odpovídající směrnici EMC. Řídicí a síťová vedení pokládejte prostorově oddělená od vedení motoru. PES Stínění vedení spojte velkoplošně s PE.

(et) **ETTEVAATUST**

EÜ-direktiivi kehtivuspiirkonnas võib sagedusjuhitavaid seadmeid ja nende lisaseadmeid kasutusele võtta ainult siis, kui on kindlaks tehtud, et masin vastab masinadirektiivi 2006/42/EÜ kaitsenõuetele.

Elektomagnetilisele ühilduvusele vastav ehitus. Juhtimis- ja võrgukaablid paigaldada mootori toitekaablist ruumiliselt eraldatuna. PES Kaabli kaitseekraan ühendada ulatuslikult talitlusmaandusega.

(hu) **VIGYÁZAT**

Az EK irányelvek hatályossági területén a frekvenciavezérelt készülékeket és azok tartozékait csak akkor szabad üzembe helyezni, ha megállapítást nyert, hogy a gép megfelel a gépek biztonságáról szóló, 2006/42/EK számú irányelv biztonsági követelményeinek.
Elektromágnesesen összeférhető kivitelt biztosítson. A motorvezetékektől térben elkülönítve vezesse vezérlő és hálózati vezetékeket. PES Nagy felületen csatlakoztassa a védőföldeléshez a vezetékárnyékolást.

(lv) **IEVĒROT PIESARDZĪBU**

Valstīs, kurās ir spēkā EK direktīvas, ierīču ar frekvenčvadību un to piederumu ekspluatāciju drīkst sākt tikai tad, ja ir konstatēta iekārtas atbilstība Mašīnu direktīvā 2006/42/EK ietvertajām aizsardzības prasībām.

EMS atbilstoša uzbūve. Vadības un tīkla kabeļus izvietot atsevišķi no motora kabeļa. PES Vada ekrānu plašā virsmā savienot ar PE.

(lt) **ATSARGIAI**

EB direktyvų taikymo srityje dažniniu būdu valdomus įrenginius ir jų priedus leidžiama pradėti naudoti tik tada, kai nustatoma, kad įrenginys atitinka Mašinų direktyvos 2006/42/EB keliamus apsaugos reikalavimus.

Montažas turi atitikti EMS reikalavimus. Valdymo ir duomenų tinklo kabelius išdėstyti atokiai nuo variklio kabelio. PES Kabelio ekraną dideliu paviršiumi sujungti su įžeminimu.

(pl) **OSTROŻNIE**

Na obszarze obowiązywania dyrektyw WE urządzenia sterowane częstotliwościowo wolno wprowadzać do eksploatacji tylko wtedy, gdy zostanie stwierdzone, że maszyna spełnia wymagania ochronne dyrektywy maszynowej 2006/42/WE.
Konstrukcja zgodna z dyrektywą w sprawie kompatybilności elektromagnetycznej (EMC). Przewody sterowania i zasilania elektrycznego należy układać oddzielnie od przewodu silnika. PES Ekranowanie połączyć z przewodem uziemiającym na większej powierzchni.

(sl) **PREVIDNO**

Na območju veljavnosti direktiv ES je zagon frekvenčno krmiljenih naprav in njihovega pribora dovoljen le tedaj, ko je bilo ugotovljeno, da stroj ustreza varnostnim zagtevam Direktive o strojih 2006/42/ES.

Montaža v skladu z EMZ. Krmilne in omrežne vodnike napeljite ločeno od vodnikov motorja. PES Oklep vodnika na veliki površini povežite z zaščitnim vodnikom.

(sk) **VÝSTRAHA**

V krajinách, ktoré spadajú pod pôsobnosť smerníc ES smú byť rádiovo ovládané zariadenia a ich príslušenstvo uvedené do prevádzky len ak je zabezpečené, že stroj spĺňa ochranné ustanovenia smernice č. 2006/42/ESS o strojových zariadeniach.

Montáž v súlade s požiadavkami elektromagnetickej kompatibility. Ovládacie a siet˙ové vedenia uložte v priestore oddelene od vedenia motora. PES Zabezpečte veľkú kontaktnú plochu medzi káblovým tienením a PE.

(bg) **ВНИМАНИЕ**

В сферата на действие на изискванията на ЕС устройствата с честотно управление и техните допълнителни устройства могат да бъдат приведени в употреба, само ако се установи, че оборудването съответства на изискванията за безопасност на машинно оборудване спрямо 2006/42/ЕО.
Монтаж с електромагнитна съвместимост. Полагане на контролните и мрежови проводници пространствено отделно от проводника на двигателя. PES Осигурете по-голяма конкактна площ между силовия екран и PE.

(ro) **PRECAUTJE**

În cadrul sferei de aplicare a directivelor UE dispozitivele controlate prin frecvenţă şi accesoriile acestora au voie să fie puse în funcţiune doar dacă se stabileşte că aparatul îndeplineşte cerinţele Directivei 2006/42/CE privind maşinile.

Montajul trebuie să fie compatibil EMC. Poziţionaţi cablurile de control şi de reţea la distanţă de cablul motorului. PES Asiguraţi o suprafaţă de contact mare între izolaţia cablului şi PE.

(hr) **OPREZ**

U području valjanosti Direktiva EZ frekvencijski upravljani uređaji i njihov pribor smiju se puštati u rad samo ako se utvrdi da stroj ispunjava zahtjeve za zaštitom iz Direktive o strojevima 2006/42/EZ.

Konstrukcija u skladu s EMC-om. Upravljački i mrežni vodovi prostorno položeni odvojeno od voda motora. PES zaslon kabela povezan PE-om na velikoj površini.

(tr) **DİKKAT**

AB Direktifi dahilinde, frekans kontrollü cihazlar ve aksesuarları, yalnızca makinenin 2006/42/EC Makina Emniyet Direktifi koruma şartlarını karşıladığı belirlendiğinde çalıştırılmalıdır.

EMC uyumlu kurulum sağlayın. Kontrol ve iletişim kablolarını uzamsal olarak motor kablosundan ayrı koyun. PES. kablo ekranı ile PE arasında geniş bir temas alanı bağlantısı olmasını sağlayın.

(uk) **ОБЕРЕЖНО!**

На території, на яку поширюється дія Директив ЄС, пристрої з частотним регулюванням та їхні приналежності можуть вводитися в експлуатацію лише в разі визнання їх такими, що відповідають вимогам до захисту, викладеним у Директиві про машинне обладнання 2006/42/EC.
Переконайтеся в тому, що встановлена система відповідає вимогам до EMC. Кабелі керування та зв'язку мають бути просторово відокремлені від кабелю електродвигуна. Забезпечте достатню контактну поверхню між екраном кабелю PES. та PE.

(ar) **احذر !**

فـــي المنطقـــة الـــتي تخضـــع لتوجيـــه الاتحـــاد الأوروبـــي، يجـــب ألا يتـــم
تشـــغيل الأجهـــزة وملحقاتهـــا الـــتي يتـــم التحكـــم فيهـــا بواســـطة الـــتردد إلا
بعـــد التأكـــد مـــن أنهـــا تســـتوفي متطلبـــات حمايـــة توجيـــه الماكينـــات 2006/42/EC.

ع كـــابلاتضَ .ا للتوافـــــق الكهرومغناطيســـــــياحـــرص علـــى أن يكـــون التركيـــب مطـــابقً
ا عـــن كابـــل المحـــرك. تأكـــد مـــن وجـــودالتحكـــم والاتصـــال بشـــكل منفصـــل مكـــاني
PE و PES منطقـــة تلامـــس كبـــيرة بيـــن شاشـــة كبـــل

UL cautions, warnings, and instructions

Wiring warnings for electrical practices and wire sizes

The Cautions, Warnings, and Instructions in this section summarize the procedures necessary to ensure an inverter installation complies with Underwriters Laboratories® guidelines.

en

Warning!

Use 60/75°C Cu wire only or equivalent.

en

Warning!

Open type equipment.

en

Warning!

Suitable for use on a circuit capable of delivering not more than 5,000 rms symmetrical amperes:

- **240 V maximum for DM1-32 models**
- **500 V maximum for DM1-34 models**
- **600 V maximum for DM1-35 models**

Circuit breaker and fuse sizes

The adjustable frequency drive's connections to input power must include UL listed inverse time circuit breakers with 600 V rating, or UL listed fuses.

Wire connectors

en

Warning!

Field wiring connections must be made by a UL listed and CSA certified ring lug terminal connector sized for the wire gauge being used. The connector must be fixed using the crimping tool specified by the connector manufacturer.

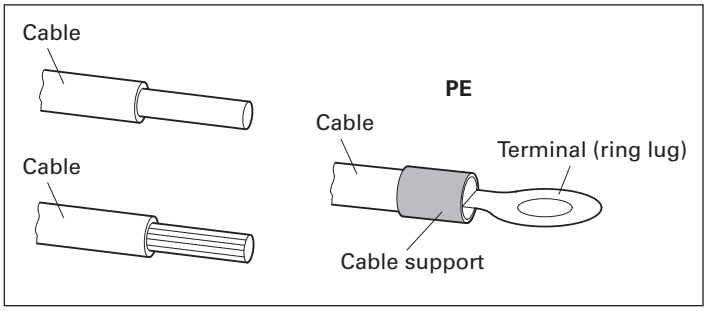

Motor overload protection

DM1 adjustable frequency drives provide solid-state motor overload protection, which depends on the proper setting of the following parameter: P5.1.2 "current limit."

"The setting range is (0.2 * rated current) to (2 * rated current).

en

Warning!

When two or more motors are connected to the inverter, they cannot be protected by the electronic overload protection. Install an external thermal relay on each motor.

Technical support contact information

	Americas	EMEA	APAC
Website	www.eaton.com/drives	www.eaton.com/AfterSales	www.eaton.com.cn/electrical
Email	VFDaftermarketEG@eaton.com	AfterSalesEGBonn@eaton.com	CustomerServicePDCNA@eaton.com
Phone	1-877-386-2273 (8:00 a.m. to 6:00 p.m. Eastern Time U. S. [UTC–5]) 800-543-7038 (6:00 p.m. to 8:00 a.m. Eastern Time U.S. [UTC–5]) TRCDrivesTechSupport@eaton.com	+49 (0) 180 5 223822	800 9881203

China ROHS 2 and WEEE Discard Statements

产品中有害物质的名称及含量

部件名称	有害物质					
	铅 (Pb)	汞 (Hg)	镉 (Cd)	六价铬 (Cr(VI))	多溴联苯 (PBB)	多溴二苯醚 (PBDE)
电池类	✕	○	○	○	○	○
印刷电路组件	✕	○	○	○	○	○
电源线插座端子	✕	○	○	○	○	○
箱体五金类	✕	○	○	○	○	○
开关 / 断路器类	○	○	✕	○	○	○

本表格依据 SJ/T 11364 的规定编制。

○：表示该有害物质在该部件所有均质材料中的含量均在GB/T 26572规定的限量要求以下。

✕：表示该有害物质至少在该部件的某一均质材料中的含量超出GB/T 26572规定的限量要求。

环保使用期限的免责条款：环保使用期限规定的具体期限仅为符合中华人民共和国的相应的法律规定，并非代表我司向客户提供保证或负有任何义务。环保使用期限中假定客户按照操作手册在正常情况下使用本产品。对于本产品中配备的某些组合件（例如，装有电池的组合件）的环保使用期限，可能低于本产品的环保使用期限。

Eaton.com/recycling

The crossed-out wheeled bin symbol indicates that waste electrical and electronic equipment should not be discarded together with un-separated household waste, but must be collected separately. The product should be handed in for recycling in accordance with the local environmental regulations for waste disposal.

By separating waste electrical and electronic equipment , you will help reduce the volume of waste sent for incineration or land-fills and minimize any potential negative impact on human health and environment.

CERTIFICATE OF COMPLIANCE

Certificate Number A-E134360
Report Reference E134360-20201029
Date 2020-November-09

Issued to: Eaton
W 126 N 7250 FLINT DR
MENOMONEE FALLS WI 53051-4404 US

This is to certify that representative samples of POWER CONVERSION EQUIPMENT
See Addendum Page for Product Designation(s).

Have been investigated by UL in accordance with the Standard(s) indicated on this Certificate.

Standard(s) for Safety: UL 61800-5-1 – ADJUSTABLE SPEED ELECTRICAL POWER DRIVE SYSTEMS – PART 5-1: SAFETY REQUIREMENTS – ELECTRICAL, THERMAL AND ENERGY.

C22.2 No. 274-17 - Adjustable Speed Drives

Additional Information: See the UL Online Certifications Directory at https://iq.ulprospector.com for additional information

This Certificate of Compliance does not provide authorization to apply the UL Mark. Only the UL Follow-Up Services Procedure provides authorization to apply the UL Mark.

Only those products bearing the UL Mark should be considered as being UL Certified and covered under UL's Follow-Up Services.

Look for the UL Certification Mark on the product.

Bruce Mahrenholz, Director North American Certification Program
UL LLC

Any information and documentation involving UL Mark services are provided on behalf of UL LLC (UL) or any authorized licensee of UL. For questions, please contact a local UL Customer Service Representative at http://ul.com/aboutul/locations/

CERTIFICATE OF COMPLIANCE

Certificate Number A-E134360
Report Reference E134360-20201029
Date 2020-November-09

This is to certify that representative samples of the product as specified on this certificate were tested according to the current UL requirements

Enclosed or Open Type Adjustable Speed Drives. Cat. DM1, followed by 1, followed by 2, followed by 1D6, 3D0, 4D8, 7D8, 011 or 017, followed by E or N, followed by B or N, followed by S or N, followed by 20, followed by S or B, followed by blank, EM or AP.

Enclosed or Open Type Adjustable Speed Drives. Cat. DM1, followed by 1, followed by 1, followed by 1D6, 3D0, 4D8 or 6D9, followed by E or N, followed by B or N, followed by S or N, followed by 20, followed by S or B, followed by blank, EM or AP.

Accessories, Plenum Rated NEMA 1 Kits, for upgrading Open Type to Type 1 Enclosure for Plenum Rated application, Models DXM-ACC-FR1N1PKIT, DXM-ACC-FR2N1PKIT, DXM-ACC-FR3N1PKIT, DXM-ACC-FR4N1PKIT.

Bruce Mahrenholz, Director North American Certification Program
UL LLC

Any information and documentation involving UL Mark services are provided on behalf of UL LLC (UL) or any authorized licensee of UL. For questions, please contact a local UL Customer Service Representative at http://ul.com/aboutul/locations/

CERTIFICATE OF COMPLIANCE

Certificate Number A-E134360
Report Reference E134360-20200331
Issue Date 2020-APRIL-13

Issued to: Eaton
W 126 N 7250 FLINT DR
MENOMONEE FALLS WI 53051-4404

This certificate confirms that representative samples of POWER CONVERSION EQUIPMENT
REFER ADDENDUM PAGE FOR MODELS

Have been investigated by UL in accordance with the Standard(s) indicated on this Certificate.

Standard(s) for Safety: UL 61800-5-1 STANDARD FOR ADJUSTABLE SPEED ELECTRICAL POWER DRIVE SYSTEMS - PART 5-1: SAFETY REQUIREMENTS - ELECTRICAL, THERMAL AND ENERGY
CSA C22.2 NO. 274-17 ADJUSTABLE SPEED DRIVES
IEC/ EN 61800-5-1 ADJUSTABLE SPEED ELECTRICAL POWER DRIVE SYSTEMS – PART 5-1: SAFETY REQUIREMENTS – ELECTRICAL, THERMAL AND ENERG

Additional Information: See the UL Online Certifications Directory at https://iq.ulprospector.com for additional information.

This *Certificate of Compliance* does not provide authorization to apply the UL Mark. Only the UL Follow-Up Services Procedure provides authorization to apply the UL Mark.

Only those products bearing the UL Mark should be considered as being UL Certified and covered under UL's Follow-Up Services.

Look for the UL Certification Mark on the product.

Bruce Mahrenholz, Director North American Certification Program
UL LLC

Any information and documentation involving UL Mark services are provided on behalf of UL LLC (UL) or any authorized licensee of UL. For questions, please contact a local UL Customer Service Representative at http://ul.com/aboutul/locations/

Page 1 of 2

CERTIFICATE OF COMPLIANCE

Certificate Number A-E134360
Report Reference E134360-20200331
Issue Date 2020-APRIL-13

This is to certify that representative samples of the product as specified on this certificate were tested according to the current UL requirements.

Enclosed or Open Type Adjustable Speed Drives. Cat. DM1, followed by 3, followed by 4, followed by 1D5, 2D2, 4D3, 5D6, 7D6, 012, 016, 023, 031 or 038, followed by E or N, followed by B or N, followed by S or N, followed by 20, followed by S or B, followed by blank, EM or AP.

Enclosed or Open Type Adjustable Speed Drives. Cat. DM1, followed by 3, followed by 2, followed by 1D6, 3D0, 4D8, 7D8, 011, 017, 025, 032 or 048, followed by E or N, followed by B or N, followed by S or N, followed by 20, followed by S or B, followed by blank, EM or AP.

Accessories, NEMA 1 Kits, for upgrading Open Type to Type 1 Enclosure, Models DXM-ACC-FR1N1KIT, DXM-ACC-FR2N1KIT, DXM-ACC-FR3N1KIT, DXM-ACC-FR4N1KIT.

Accessories, PROFIBUS Module, Model No. DXM-NET-PROFIBUS.

Accessories, CANOPEN Module, Model No. DXM-NET-CANOPEN.

Accessories, SMARTWIRE Module, Model No. DXG-NET-SWD-IP20 and DXG-NET-SWD-IP54.

Accessories, Standard Keypad , Model No. DXG-KEY-LCD.

Accessories, Remote Keypad, Model No. DXG-KEY-RMTKIT.

Accessories, Remote Keypad Mounting Holder, Model No. DXG-KEY-HOLDER and DXG-KEY-HOLDER-BP.

Accessories, Software Cable, Model No. DXG-CBL-PCCABLE.

Bruce Mahrenholz, Director North American Certification Program
UL LLC

Any information and documentation involving UL Mark services are provided on behalf of UL LLC (UL) or any authorized licensee of UL. For questions, please contact a local UL Customer Service Representative at http://ul.com/aboutul/locations/

Page 2 of 2

EC Type-Examination Certificate

Functional Safety

TÜVRheinland CERTIFIED

www.tuv.com
ID 0600000000

Reg.-No.: 01/205/5753.02/21

Product tested	"Safe Torque Off" (STO) within PowerXL DM1 Series VFD of Eaton Corporation	**Certificate holder**	Eaton Corporation W126N7250 Flint Drive Menomonee Falls, WI 53051 USA
Type designation	PowerXL DM1 Series VFD; Details see actual "Revision List"		
Codes and standards	IEC 61800-5-2:2016 EN 61800-5-2:2007 EN 61800-5-2:2017 EN IEC 61800-3:2018 IEC 61800-5-1:2016 EN 61800-5-1:2007 + A1:2017		ISO 13849-1:2015 EN ISO 13849-1:2015 IEC 62061:2015 EN 62061:2005 + AC:2010 + A1:2013 + A2:2015 IEC 61508 Parts 1-7:2010
Intended application	The safety function "Safe Torque Off" within PowerXL DM1 Series VFD complies with the requirements for SIL 2 according to EN / IEC 61508, EN / IEC 61800-5-2, SIL CL 2 according to EN / IEC 62061, as well as PL d / Cat. 3 according to EN ISO 13849-1 and can be used in applications up to these safety levels. Further the safety function can be used in applications according to IEC 60204-1:2016 / EN 60204-1:2018.		
Specific requirements	The instructions of Installation Manual and Safety Manual shall be considered.		

It is confirmed, that the product under test complies with the requirements for machines defined in Annex I of the EC Directive 2006/42/EC.

Valid until 2026-06-16

The issue of this certificate is based upon an examination, whose results are documented in Report No. 968/FSP 1991.02/21 dated 2021-06-10.
This certificate is valid only for products which are identical with the product tested.

TÜVRheinland 0035 Notified Body

Köln, 2021-06-16

Notified Body for Machinery, NB 0035

Dipl.-Ing. Jelena Stenzel

TÜV Rheinland Industrie Service GmbH, Am Grauen Stein, 51105 Köln / Germany
Tel.: +49 221 806-2434, Fax: +49 221 806-1354, E-Mail: industrie-service@de.tuv.com

www.fs-products.com
www.tuv.com

TÜVRheinland®
Precisely Right.

PowerXL DM1 STO TUV Certificate RL (EC Type)

Doc. No.: EU-DoC-VFD-DM1-Basic-20210618

EU Declaration of Conformity

We, **Eaton Corporation**
W126N7250 Flint Drive, Menomonee Falls, WI 53051, USA

declare under our sole responsibility as manufacturer that the product (family),

PowerXL DM1 Series (DM1-3xxxxxB-N20B-...) Variable Frequency Drives

provided that it is installed, maintained and used in the application intended for, with respect to the relevant manufacturer's instructions, installation standards and "good engineering practices", complies with the provisions of Council directive(s):

2014/35/EU	**Low Voltage Directive**
2014/30/EU	**EMC Directive**
2011/65/EU	**RoHS Directive**
2009/125/EC	**Ecodesign Directive (Regulation 2019/1781)**
2014/53/EU	**Radio Emission Directive**

based on compliance with European standard(s):

EN 61800-5-1:2007+A1:2017
EN 61800-3:2004/A1:2012 and EN IEC 61800-3:2018
EN IEC 63000:2018
EN 61800-9-2:2017
EN 62479:2010
ETSI EN 301 489-1 V2.2.3
ETSI EN 301 489-17 V3.2.2
ETSI EN 300 328 V2.1.1

Issued: 2021-06-18

Simon Chen
VFD Engineering Manager

Powering Business Worldwide

PowerXL DM1 CE DoC for DM1 Basic

Doc. No.: EU-DoC-VFD-DM1-Pro-20210618

EU Declaration of Conformity

We, **Eaton Corporation**
W126N7250 Flint Drive, Menomonee Falls, WI 53051, USA

declare under our sole responsibility as manufacturer that the product (family),

PowerXL DM1 Series (DM1-xxxxxxB-S20S-...) Variable Frequency Drives

provided that it is installed, maintained and used in the application intended for, with respect to the relevant manufacturer's instructions, installation standards and "good engineering practices", complies with the provisions of Council directive(s):

2014/35/EU	**Low Voltage Directive**
2014/30/EU	**EMC Directive**
2011/65/EU	**RoHS Directive**
2009/125/EC	**Ecodesign Directive (Regulation 2019/1781)**
2014/53/EU	**Radio Emission Directive**
2006/42/EC	**Machinery Directive**

based on compliance with European standard(s):

EN 61800-5-1:2007+A1:2017
EN 61800-3:2004/A1:2012 and EN IEC 61800-3:2018
EN IEC 63000:2018
EN 61800-9-2:2017
EN 62479:2010
ETSI EN 301 489-1 V2.2.3
ETSI EN 301 489-17 V3.2.2
ETSI EN 300 328 V2.1.1

Powering Business Worldwide

PowerXL DM1 CE DoC for DM1 Pro

Doc.No.: UK-DoC-VFD-DM1-Basic-20211217

Declaration of Conformity

We, **Eaton Corporation**
W126N7250 Flint Drive, Menomonee Falls, WI 53051, USA

declare under our sole responsibility as manufacturer that the product (family)

PowerXL DM1 Series (DM1-3xxxxxB-N20B-...) Variable Frequency Drives

according to the list on the following pages and provided that it is installed, maintained and used in the application intended for, with respect to the relevant manufacturer´s instructions, installation standards and "good engineering practices", complies with the statutory requirements:

2016 No.1101	**Electrical Equipment (Safety) Regulations 2016**
2016 No.1091	**Electromagnetic Compatibility Regulations 2016**
2012 No.3032	**Restriction of the Use of Certain Hazardous Substances in Electrical and Electronic Equipment Regulations 2012**
2021 No.745	**Ecodesign for Energy-Related Products and Energy Information Regulations 2021**
2017 No.1206	**Radio Equipment Regulations 2017**

based on compliance with the following standard(s):

EN 61800-5-1:2007+A1:2017
EN IEC 61800-3:2018
EN IEC 63000:2018
EN 61800-9-2:2017
EN 62479:2010
ETSI EN 301 489-1 V2.2.3
ETSI EN 301 489-17 V3.2.4
ETSI EN 300 328 V2.2.2

Issued: 2021-12-17

Simon Chen
VFD Engineering Manager

Powering Business Worldwide

Page 1 of 4

PowerXL DM1 UKCA DoC for DM1 Basic

Doc.No.: UK-DoC-VFD-DM1-Pro-20211217

Declaration of Conformity

We, **Eaton Corporation**
W126N7250 Flint Drive, Menomonee Falls, WI 53051, USA

declare under our sole responsibility as manufacturer that the product (family)

PowerXL DM1 Series (DM1-xxxxxxB-S20S-...) Variable Frequency Drives

according to the list on the following pages and provided that it is installed, maintained and used in the application intended for, with respect to the relevant manufacturer´s instructions, installation standards and "good engineering practices", complies with the statutory requirements:

2016 No.1101	**Electrical Equipment (Safety) Regulations 2016**
2016 No.1091	**Electromagnetic Compatibility Regulations 2016**
2012 No.3032	**Restriction of the Use of Certain Hazardous Substances in Electrical and Electronic Equipment Regulations 2012**
2021 No.745	**Ecodesign for Energy-Related Products and Energy Information Regulations 2021**
2017 No.1206	**Radio Equipment Regulations 2017**

based on compliance with the following standard(s):

EN 61800-5-1:2007+A1:2017
EN IEC 61800-3:2018
EN IEC 63000:2018
EN 61800-9-2:2017
EN 62479:2010
ETSI EN 301 489-1 V2.2.3
ETSI EN 301 489-17 V3.2.4
ETSI EN 300 328 V2.2.2

Issued: 2021-12-17

Simon Chen
VFD Engineering Manager

Powering Business Worldwide

Page 1 of 7

PowerXL DM1 UKCA DoC for DM1 Pro

DISCLAIMER OF WARRANTIES AND LIMITATION OF LIABILITY

The information, recommendations, descriptions and safety notations in this document are based on Eaton Corporation's ("Eaton") experience and judgment and may not cover all contingencies. If further information is required, an Eaton sales office should be consulted. Sale of the product shown in this literature is subject to the terms and conditions outlined in appropriate Eaton selling policies or other contractual agreement between Eaton and the purchaser.

THERE ARE NO UNDERSTANDINGS, AGREEMENTS, WARRANTIES, EXPRESSED OR IMPLIED, INCLUDING WARRANTIES OF FITNESS FOR A PARTICULAR PURPOSE OR MERCHANTABILITY, OTHER THAN THOSE SPECIFICALLY SET OUT IN ANY EXISTING CONTRACT BETWEEN THE PARTIES. ANY SUCH CONTRACT STATES THE ENTIRE OBLIGATION OF EATON. THE CONTENTS OF THIS DOCUMENT SHALL NOT BECOME PART OF OR MODIFY ANY CONTRACT BETWEEN THE PARTIES.

In no event will Eaton be responsible to the purchaser or user in contract, in tort (including negligence), strict liability or other-wise for any special, indirect, incidental or consequential damage or loss whatsoever, including but not limited to damage or loss of use of equipment, plant or power system, cost of capital, loss of power, additional expenses in the use of existing power facilities, or claims against the purchaser or user by its customers resulting from the use of the information, recommendations and descriptions contained herein. The information contained in this manual is subject to change without notice.

Contact Addresses:
Eaton Industries GmbH,
Hein-Moeller-Straße 7-11,
53115 Bonn, Germany

Eaton Corporation
W126N7250 Flint Drive
Menomonee Falls
WI 53051 USA

Eaton Electric Ltd.
P.O. Box 554, Abbey Park Southampton Road,
Titchfield, PO14 4QA
United Kingdom

Eaton
1000 Eaton Boulevard
Cleveland, OH 44122
United States
Eaton.com

Powering Business Worldwide

© 2021 Eaton
All Rights Reserved
Printed in USA
Publication No. PUB53675 / TBG001535
December 2021

Eaton is a registered trademark.

All other trademarks are property of their respective owners.