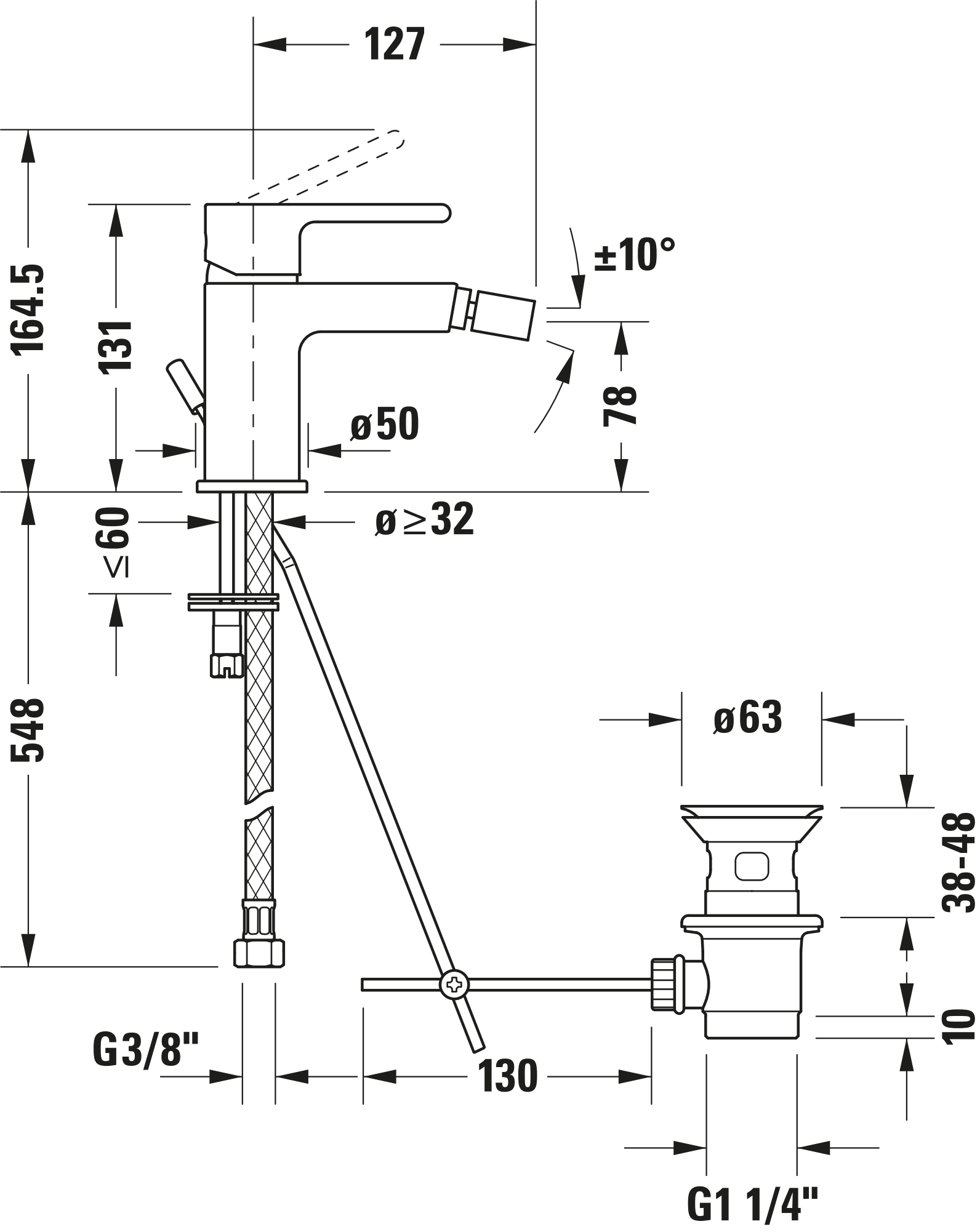
127
164.5
131
±10°
78
ø50
ø≥32
≤60
548
ø63
38-48
10
G3/8"
130
G1 1/4"