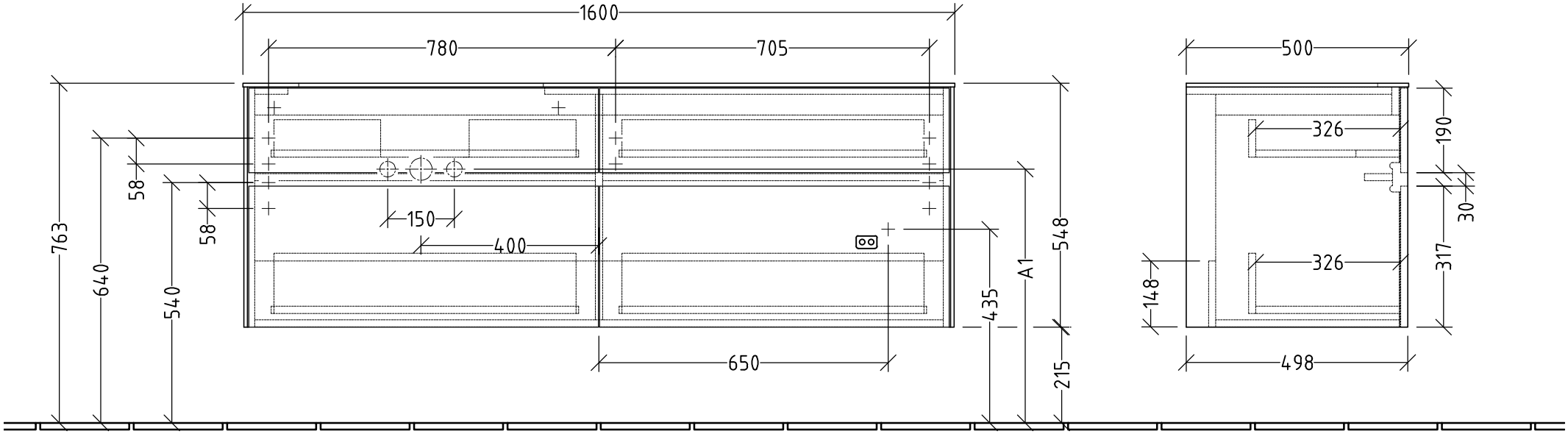

N L
220 - 240 V

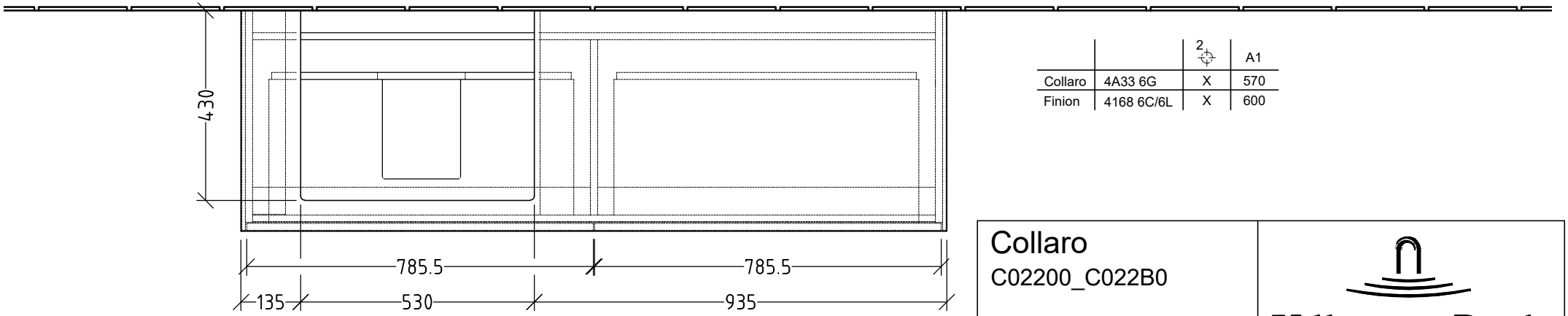

		2	A1
Collaro	4A33 6G	X	570
Finion	4168 6C/6L	X	600

Collaro
C02200_C022B0

V03 / 15.02.2024

Villeroy & Boch
1748