Pioneering for You

Wilo-Port 800



en Installation and operating instructions

2543019 • Ed.03/2025-07



Table of Contents

1 General ... 4
- 1.1 About these instructions ... 4
- 1.2 Copyright ... 4
- 1.3 Subject to change ... 4
- 1.4 Exclusion from warranty and liability ... 4

2 Safety ... 4
- 2.1 Safety signs, instructions, and text markups ... 4
- 2.2 Staff qualifications ... 5
- 2.3 Protective equipment for staff ... 5
- 2.4 Electrical connection ... 6
- 2.5 Monitoring devices ... 6
- 2.6 Explosive atmosphere in the pump chamber ... 6
- 2.7 Transport ... 6
- 2.8 Installing/dismantling ... 6
- 2.9 During operation ... 6
- 2.10 Cleaning and disinfection ... 6
- 2.11 Maintenance tasks ... 6
- 2.12 Operator responsibilities ... 7

3 Application/use ... 7
- 3.1 Intended use ... 7
- 3.2 Improper use ... 7

4 Product description ... 7
- 4.1 Design ... 7
- 4.2 Dimension ... 9
- 4.3 Materials ... 9
- 4.4 Monitoring devices ... 9
- 4.5 Operating principle ... 9
- 4.6 Type key ... 10
- 4.7 Technical data ... 10
- 4.8 Date of production ... 10
- 4.9 Scope of delivery ... 10
- 4.10 Accessories ... 10

5 Transportation and storage ... 11
- 5.1 Delivery ... 11
- 5.2 Transport ... 11
- 5.3 Use of lifting equipment ... 11
- 5.4 Storage ... 12

6 Installation and electrical connection ... 12
- 6.1 Staff qualifications ... 12
- 6.2 Installation types ... 12
- 6.3 Operator responsibilities ... 12
- 6.4 Planning information ... 12
- 6.5 Installation ... 13
- 6.6 Electrical connection ... 25

7 Commissioning ... 25
- 7.1 Operation ... 26
- 7.2 Personnel qualifications ... 26
- 7.3 Operator responsibilities ... 26
- 7.4 Test run ... 26
- 7.5 Operation ... 27
- 7.6 During operation ... 27

8 Shutdown/dismantling ... 27
- 8.1 Operator responsibilities ... 27
- 8.2 Shutdown ... 27
- 8.3 Cleaning and disinfection ... 28
- 8.4 Pump removal ... 28

9 Maintenance and repair ... 29

10 Spare parts ... 29

11 Faults, causes and remedies ... 29

12 Disposal ... 29
- 12.1 Protective clothing ... 29
- 12.2 Information on the collection of used electrical and electronic products ... 29

1 General

1.1 About these instructions

These instructions are a part of the product. Obey the instructions for correct handling and use:

- Read the instructions carefully before starting any works.
- Keep the instructions in a location where it is easy to access.
- Follow the product specifications.
- Follow the markings on the product.

1.2 Copyright

WILO SE © 2025

The reproduction, distribution, and use of this document and the communication of its contents to others without express consent is prohibited. Infringement results in the obligation to pay for damages. All rights reserved.

1.3 Subject to change

Wilo reserves the right to change the listed data without prior notice and is not liable for technical inaccuracies and/or omissions. The illustrations vary from the original and are intended as a sample representation of the product.

1.4 Exclusion from warranty and liability

Wilo accepts no warranty or liability in these cases:

- Wrong configuration because the operator or the customer did not give enough or correct instructions
- Non-compliance with these instructions
- Incorrect use of the product
- Incorrect storage or transport
- Incorrect installation or dismantling
- Not sufficient maintenance
- Non-approved repairs
- Not applicable installation location
- Chemical, electrical or electrochemical causes
- Wear of product components

2 Safety

This section contains safety information for each phase of the product's lifecycle. Disregarding this information leads to:

- Danger to persons
- Danger to the environment
- Damage to property
- Loss of claims for damages

2.1 Safety signs, instructions, and text markups

The safety instructions are structured as below:

- Danger to persons: signal word, safety symbol, text, and shaded grey.
- Property damage: signal word and text.

Signal words

- **DANGER!**
  Disregarding these instructions leads to death or serious injury.
- **WARNING!**
  Disregarding these instructions leads to (serious) injury.
- **CAUTION!**
  Disregarding these instructions leads to property damage or even a total loss.
- **NOTICE!**
  Useful information for handling the product.

Text markups

✓ Precondition

1. Work step/list
   ⇒ Notice/instructions
   ► Result

Cross-references

The name of the section or table is put in quotation marks “ ”. The page number follows in square brackets [ ].

Overview of safety symbols



Danger of death because of electric shock


Danger of death because of explosion


Danger because of bacterial infection


Warning – risk from hot surfaces


Wear safety helmet.


Wear safety shoes.


Wear safety gloves.


Wear respiratory mask.


Wear safety glasses.


Obey the instructions.


Useful information

2.2 Staff qualifications

- Two persons must do the work.
- The staff knows the local accident prevention regulations.
- The staff reads and understands these instructions.
- Underground (concealed-floor) installation: Only a specialist in underground construction and pipe-laying must do the work.
  Necessary knowledge: pit installation including excavation, preparation, backfilling, connection of plastic pipes, and buoyancy safeguards
- Lifting work: Only a specialist must do the work.
  Necessary knowledge: use of lifting accessories, lifting slings, and slinging points

This product is not for use by:

- Persons (including children) below the age of 16.
- Persons below the age of 21 without supervision from an expert.
- Persons with reduced physical, sensory, or mental abilities.

2.3 Protective equipment for staff

This protective equipment is the necessary basic equipment. Obey the factory regulations.

Protective equipment: transport, installation, removal, and maintenance

- Safety shoes: Protection class S1 (uvex 1 sport S1)
- Safety gloves: 4X42C (uvex C500 wet)
- Safety helmet (EN 397): conforms to the standard and protects against lateral deformation
  (If lifting accessories are used)

Protective equipment: cleaning work

- Safety gloves: 4X42C + Type A (uvex protector chemical NK2725B)

- Safety glasses: uvex skyguard NT
  - Marking of frame: W 166 34 F CE
  - Marking of eyeglass-lens: 0-0.0* W1 FKN CE
    * The safety class for filters is not necessary for this work.
- Respiratory mask: Half mask 3M series 6000 with filter 6055 A2

Article recommendations

The mentioned branded articles are non-binding suggestions. Equivalent products from other brands can also be used. The prerequisite is obeying the standards mentioned.

WILO SE accepts no liability for the articles mentioned regarding their conformity to the applicable standards.

2.4 Electrical connection

- Do electrical work only by a qualified electrician.
- Obey the operating instructions for the installed pumps for electrical connection.
- Connect all pumps to the protective earth conductor.

2.5 Monitoring devices

The pump chamber is for collecting sewage. If there is a failure, the sewage can go back into the inlet and cause the pump chamber to overflow.

For a stable operation, it is recommended to install a high water alarm. For a higher safety, transmit the high water alarm through GSM or fieldbus.

2.6 Explosive atmosphere in the pump chamber

Sewage containing faeces can lead to gas collections in the pump chamber. An explosive atmosphere can occur. This atmosphere can ignite and lead to an explosion. To prevent an explosive atmosphere, follow these points:

- Make sure that all connections for the inlet, discharge pipe, and ventilation are sealed tightly. Obey local regulations for these connections.
- Make sure that the operating space is sufficiently ventilated.
- Obey local regulations to mark an Ex zone.

2.7 Transport

- Obey local regulations and laws on accident prevention and work safety on-site.
- Mark and close the working area.
- Keep not permitted persons away from the working area.
- Remove loose components from the product.
- Always attach the lifting slings to the slinging points.
- Make sure that the lifting slings are tight.
- Seal all open connections in a watertight manner.
- Move the pump chamber on a pallet.
- Move the pump chamber upright.
  To prevent damage to pipework and pipe fittings, move the pump chamber only upright.

2.8 Installing/dismantling

- Two persons must do the work.
- Obey local regulations and laws on accident prevention and work safety on-site.
- Mark and close the working area.
- Keep not permitted persons away from the working area.
- Remove the objects lying around at the working area.
- If it is no longer safe to work because of the weather conditions, stop working immediately.
- When dismantling, shut off inlet and discharge pipe.
- Toxic or asphyxiating gases can collect in closed rooms or buildings. Wear protective equipment (e.g., gas detector). Obey the factory regulations.

2.9 During operation

- Open all shut-off valves in the inlet and discharge pipe.
- The maximum inflow must be less than the maximum output of the system.
- Do not open the inspection opening.
- Make sure that the operating space is sufficiently ventilated.

2.10 Cleaning and disinfection

- Wear protective equipment. Obey the factory regulations.
- Use a disinfectant. Follow the manufacturer's instructions:
  - Wear the given protective equipment. If you are not sure, contact your supervisor.
  - Give the staff the necessary information about the disinfectant and its correct use.

2.11 Maintenance tasks

- Two persons must do the work.
- When dismantling, shut off inlet and discharge pipe.
- Only do maintenance tasks listed in this installation and operating instructions.
- Only use original parts from the manufacturer. The use of non-original parts releases the manufacturer from all liability.
- Immediately clean up and remove leaked liquids (fluid, operating fluid). Obey local regulations to dispose of these liquids.

About the installed products:

- Do electrical work only by a qualified electrician.

- Make sure that the product is disconnected from the mains connection. Prevent the product from accidental switching on.
- For maintenance work, follow the operating instruction of the manufacturer.

2.12 Operator responsibilities

- Supply these instructions in the language which the staff can read and understand.
- Make sure that staff are trained to do the set tasks.
- Supply protective equipment. Make sure that staff wears protective equipment.
- Make sure that attached safety and warning signs are clearly readable.
- Inform staff how the system operates.

3 Application/use

3.1 Intended use

When used with a submersible pump, working as a pumping station for sewage without faeces (version D) and with faeces (version B):

- In cases where sewage cannot be discharged directly into the sewer system through a natural downward slope
- For backflow resistant drainage in cases where the discharge point is below the backflow level

NOTICE! When pumping sewage with oil or grease content, install an oil and grease separator upstream of the pump chamber.

Type testing in accordance with (DIN) EN 12050

Pump type	DIN EN 12050-1	EN 12050-1	EN 12050-2
Rexa MINI3-S03	–	•	–
Rexa FIT-S03	–	•	–
Rexa PRO-S03	•	•	–
Rexa MINI3-V04	–	–	•
	Key • = approved – = not approved		

3.2 Improper use



DANGER

Explosion hazard when pumping explosive fluids!

The pump chamber is not for collecting highly flammable and explosive fluids. There is a danger of death through explosion.

- Do not collect and pump highly flammable and explosive fluids (gasoline, kerosene, ...).

Do **not** use for these fluids:

- Sewage from discharge points higher than the backflow level which can be discharged directly into the sewer system through a natural downward slope
- Debris, ash, rubbish, glass, sand, plaster, cement, lime, mortar, fibrous materials, textiles, paper towels, wet wipes (e.g. fleece cloths, moist toilet paper wipes), nappies, cardboard, coarse paper, synthetic resins, tar, kitchen waste, grease, oil
- Slaughterhouse waste, disposal of slaughtered animals and animal waste (liquid manure etc.)
- Toxic, aggressive and corrosive fluids, such as heavy metals, biocides, pesticides, acids, bases, salts, swimming pool water
- Cleaning agents, disinfectants, dishwashing or laundry detergents in excessive quantities, which have a disproportionately high degree of foam formation
- Drinking water

Do not install the pump chamber inside buildings.

To use the product correctly, follow these installation and operating instructions.

4 Product description

4.1 Design

Pump chamber made of plastic for vertical underground (concealed-floor) installation outside buildings.

Fig.1: PORT800.1-03B

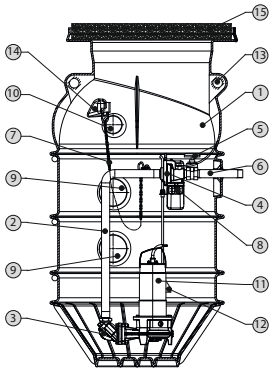

Fig.1: PORT800.2-03B

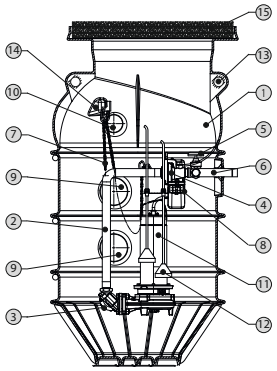

Fig.1: PORT800.2-04D

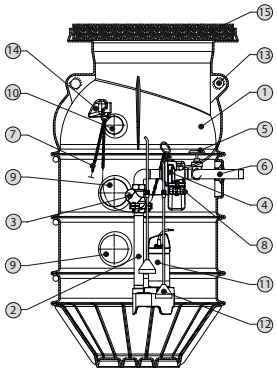

Fig. 1: Overview

1	Pump chamber
2	Discharge pipe
3	Non-return valve
4	Surface coupling
5	Shut-off device
6	Discharge connection
7	Lifting equipment (chain)
8	Cross beam
9	Inlet connection
10	Ventilation/cable ducts
11	Pump
12	Level control
13	Slinging point for lifting equipment
14	Hook for slinging of chain
15	Pump chamber cover

Ready-to-install plastic pump chamber:

- Monolithic design without sealing surfaces
- Semi-spherical bottom to minimise deposits and maximise the structure stability
- Slinging points for easy relocation and movement
- Integrated fins to prevent buoyancy against ground water up to the ground surface without the requirement for concrete weights

Full pipework :

- Surface coupling for fast and easy pump installation
- Non-return valve
- Detachable non-return ball valve installed directly at the discharge port of the pump
- Connections on the pipework for a flush connection and a vacuum relief valve
- 3 connections for inlet and 2 connections for ventilation and cable ducts

A pump chain is included as lifting equipment for pumps.

Pump chamber cover available in classes A 15, B 125 and D 400

4.2 Dimension

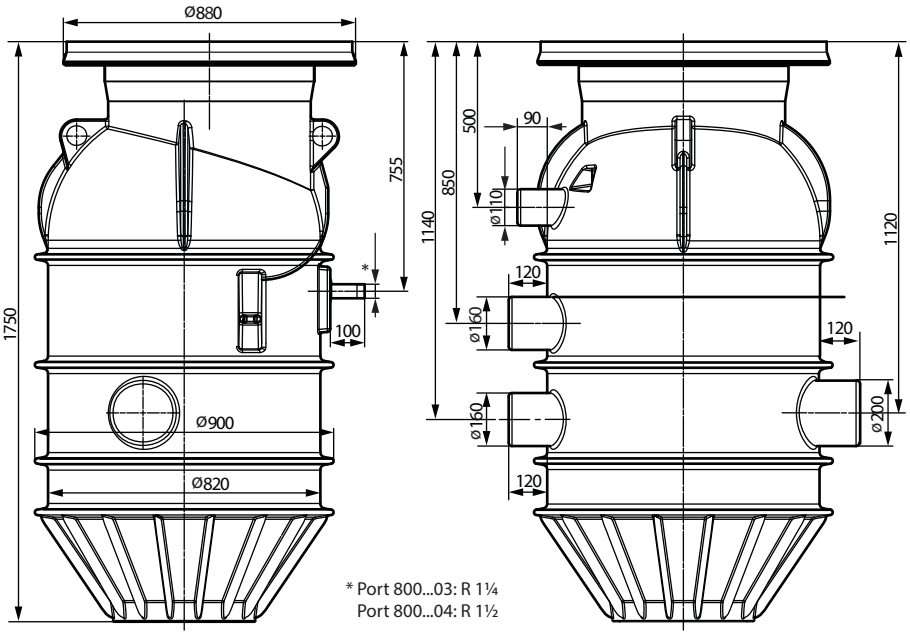

Fig. 2: Dimension drawings 1750 mm

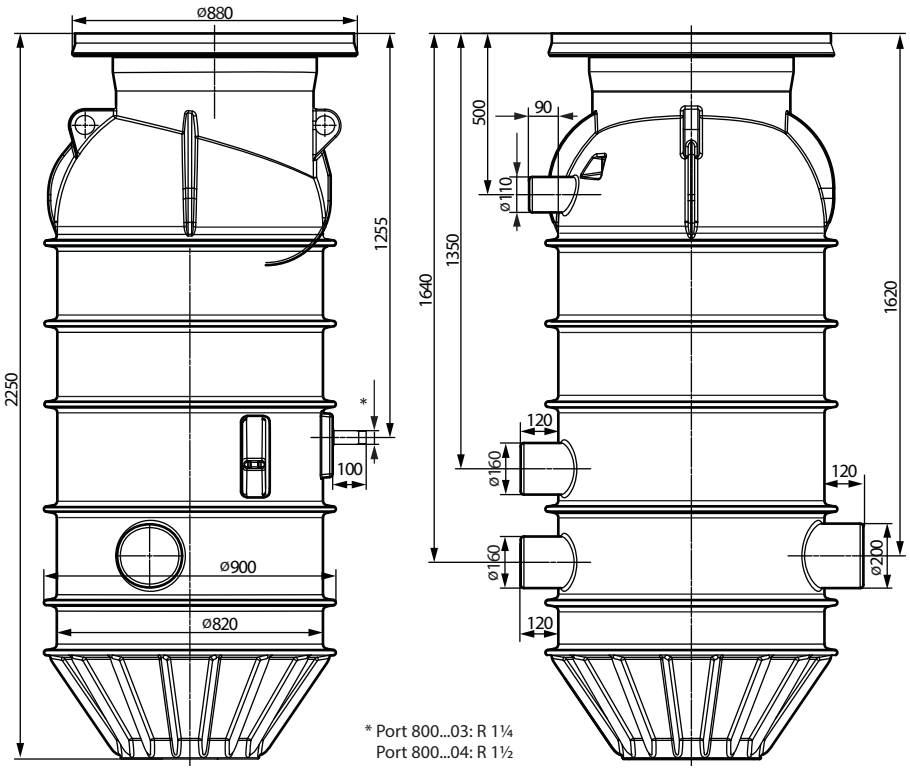

Fig. 3: Dimension drawings 2250 mm

NOTICE! The height dimensions change because of the pump chamber cover thickness above the pump chamber.

4.3 Materials

- Pump chamber: PE
- Pipework: Stainless steel
- Cross beam: Stainless steel
- Gate valve: Red brass
- Non-return ball valve: EN-GJL with corrosion-resistant powder coating
- Surface coupling: EN-GJL with corrosion-resistant powder coating
- Chain: Stainless steel

4.4 Monitoring devices

High water alarm with collective fault signal

It is recommended to use a high water alarm for high water levels in the pump chamber. Use the GSM network to transmit the alarm signal for a better reliability and service response time.

4.5 Operating principle

The pump chamber works automatically with a submersible pump and level control device.

The sewage flows into the pump chamber through the inlet. When the collected sewage comes to the switch-on level, the pump switches on. The sewage is pumped into the connected discharge pipe. The water level in the pump chamber falls. The control device switches off the pump after a follow-up time or when the sewage comes to the switch-off level (depending on the signal transmitter used).

4.6 Type key

Example:	**Wilo-Port 800.1-2250-03B**
Port	Product family: Pump chamber
800	Pump chamber diameter in mm
1	Number of pumps
2250	Monolithic chamber height without cover in mm
03	Discharge port: • 03 = DN/OD 32 • 04 = DN/OD 40
B	Pipework for pump type: • B = Rexa MINI3-S03, Rexa FIT-S03, Rexa PRO-S03 • D = Rexa MINI3-V04

4.7 Technical data

Max. pressure in the discharge pipe	10 bar
Discharge pipe connection	
Port 800...B	R 1¼*
Port 800...D	R 1½*
Inlet connection	1x DN/OD 225; 2x DN/OD 160
Ventilation connection/cable bushing	1x DN/OD 100
Max. ambient temperature	20 °C (68 °F)**
Max. permitted ground water level	Ground level
Gross volume	See data sheet/catalogue
Suitable pump types	• Rexa MINI3-S03 • Rexa FIT-S03 • Rexa PRO-S03 • Rexa MINI3-V04
Suitable pump chamber cover	A 15 (EN 124); B 125 (EN 124); D 400 (EN 124)***

- * Stainless steel pipe (VA) with thread
- ** Ground, below depth of 0.5 m
- ****Obey EN 124 for the field of application

4.8 Date of production

The date of production is shown according to ISO 8601: YYYYWww (e.g., 2020W53)

- YYYY = year
- W = abbreviation for week
- ww = calendar week

4.9 Scope of delivery

- Pump chamber with pre-assembled pipework
  - Discharge pipe with surface coupling, non-return valve and discharge port
  - Shut-off valve
- Chain (lifting sling for pump installation)
- Cross beam
- Installation materials for pumps
- Installation and operating instructions

4.10 Accessories

Installation

- Pump chamber extension
- Pump chamber cover class A15 (according to EN 124)
- Pump chamber cover class B125 (according to EN 124)
- Pump chamber cover class D400 (according to EN 124)
- Clamp bolting for connection to a PE discharge pipe
- Vacuum relief valve

Pump control

- Switchgear
- Submersible pump
- Float switch
- Level sensor

- Dynamic pressure bell
- Bubbling-through system
- Ex cut-off relay for connection of float switches in potentially explosive atmospheres
- Flash light

General

- Operating crank for shut-off device
- Flush connection with Storz C connection
- Flush connection extension

5 Transportation and storage

5.1 Delivery

- Immediately examine the shipment for defects (damage, completeness ...).
- Write all defects on the freight documentation.
- Tell the manufacturer about the defects on the day of receiving the shipment.
- Later told claims can no longer be asserted.

5.2 Transport



DANGER

Danger through bacterial infection!

The pump chamber is used for collecting and pumping sewage. There can be bacteria and hazardous germs. Follow these points:

- After removal, disinfect the pump chamber.
- Obey the factory regulations.

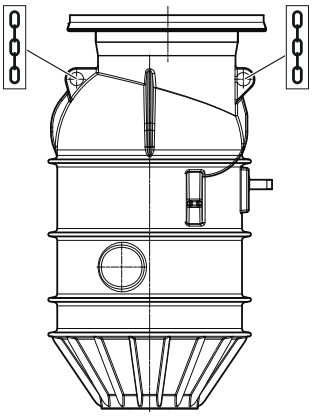

Fig. 4: Slinging points

- Wear protective equipment.
  - Safety gloves: 4X42C (uvex C500 wet)
  - Safety shoes: Protection class S1 (uvex 1 sport S1)
- Move the pump chamber on a pallet.
- Set up the pump chamber vertically.
  To prevent damage to the pipework and pipe adaptors, keep the pump chamber vertical during transport.
- Prevent the pump chamber against slipping and falling over.
  When lashing, make sure that the plastic parts do not deform.
- Tightly seal all open connections.
- Remove loose accessories from the pump chamber and pack them separately.

5.3 Use of lifting equipment

- Wear a safety helmet according to EN 397.
- Obey local regulations for the use of the lifting equipment.
- The operator is responsible for the technically correct use of the lifting equipment.
- **Lifting accessory**
  - Only use lifting accessories that function correctly.
  - Do not overload the lifting accessory.
  - Make sure that the lifting accessory is stable.
- **Lifting slings**
  - Use only legally permitted lifting slings.
  - Use lifting slings based on local conditions (weather, slinging point, load ...).
  - Always attach the lifting slings to the slinging points.
- **Lifting operation**
  - Do not jam the product when lifting and lowering.
  - Do not overload the lifting accessory.
  - If necessary (e.g., view blocked ...), help from a second person is a must.
  - Do **not stay** below suspended loads. Do **not move** suspended loads over workplaces where persons are on-site.
  - Stay away from the swivel area.
  - If it is no longer safe to work because of the weather conditions, stop working immediately.

5.4 Storage



DANGER

Danger through bacterial infection!

The pump chamber is used for collecting and pumping sewage. There can be bacteria and hazardous germs. Follow these points:

- After removal, disinfect the pump chamber.
- Obey the factory regulations.

- Fully drain the pump chamber.
- Put the pump chamber upright on a flat surface. Make sure that the product is stable.
- Prevent the pump chamber from slipping and falling over.
- Permitted storage temperature:
  - Maximum: -15 ... +60 °C (5 ... 140 °F), max. humidity: 90 %, non-condensing.
  - Recommended: 5 ... 25 °C (41 ... 77 °F), relative humidity: 40 ... 50 %.
- Seal all open connections in a watertight manner.
- Do not keep the pump chamber in spaces where welding work is carried out. The caused gases or radiation can corrode the pump chamber.
- Keep the pump chamber out of direct sunlight, heat and frost. Very high heat and frost can damage the pump chamber.
- If pumps or signal transmitters are installed in the pump chamber, follow these points:
  - Wind up the connection cables. Keep the bend constant. Attach the cables in the pump chamber.
  - Seal open ends of the connection cables in a watertight manner. Do not immerse the open cable end in the fluid.
  - Obey the manufacturer's instructions for the storage of the pumps and signal transmitters.
  - Obey the manufacturer's instructions for the storage of the switchgear.

6 Installation and electrical connection

6.1 Staff qualifications

- Electrical work: Only a qualified electrician must do the work.
  Necessary knowledge: identification and prevention of electrical hazards
- Underground (concealed-floor) installation: Only a specialist in underground construction and pipe-laying must do the work.
  Necessary knowledge: pit installation including excavation, preparation, backfilling, connection of plastic pipes, and buoyancy safeguards

6.2 Installation types

- Underground (concealed-floor) installation outside buildings

6.3 Operator responsibilities

- Obey local accident prevention and safety regulations.
- Obey regulations for working below suspended loads when using lifting accessories.
- Supply protective equipment. Make sure that staff wears protective equipment.
- Obey local sewage technology regulations for the operation of sewage systems.
- Structural components and foundations must be sufficiently stable for the device to be fixed in a safe and functional manner. The operator is responsible for supplying the correct structural components and foundations.
- Make sure there is access to the installation location.
- Obey local regulations for the installation work.
- Make sure that the available consulting documents (installation plans, installation location, inflow conditions) are full and accurate.
- Obey the consulting documents to lay and prepare the pipes.

6.4 Planning information

Note for installation

- Obey EN 1610 for installation and earthworks.
- Obey the maximum ground water level for buoyancy safety of the pump chamber.
- Design the bedding layer to support the full load of the shaft, including the pipework, pumps, and fluid.
- Use these for the bedding layer:
  - Gravel layer
  - Concrete layer
  - Reinforced concrete plate as the baseplate
- To install the pump chamber, follow these points:
  - Install only outside of buildings.
  - Do not install next to living and sleeping areas
  - Do not install in peaty soils

Dimensioning

Switch cabinet

- To control the pump system in view, e.g. manual pumping, control of the switching points, put the switch cabinet with controller next to the pit.
- Use a cable pipe with a minimum dimension of DN/OD 110.
- Supply a pull wire in the on-site cable pipe.
- The max. distance from the switch cabinet to pit includes:
  - 1 m pump cable for connection to the switch cabinet
  - The cable length sufficient to lift the pumps out of the pit
- Attach the sensors to the cross beam from above. Measure the cable length for the individual sensors in advance.

Backfilling

- Backfill the pump chamber evenly all around:
  - With cohesive soil at 1 m
  - With non-cohesive soil at 0.5 m
  - With max. layer thickness at 300 mm
  - With gravel, sand or gravel-sand mixture, grain size: max 16 mm
  - With a compaction of Dpr. 95%-97%
  - Obey guidelines and regulations.
  - Be cautious of deformation of the pump chamber.
  - Concrete filling is not permitted.
- Keep in mind the maximum height adjustment.
  - Using concrete rings: 200 mm
  - Using plastic pump chamber extension: 500 mm

Load distribution plate

- Install a load distribution plate for pump chamber cover D 400:
  - It must be fully supported by the substructure, not by the pump chamber.
  - Dimensions: External Ø: 1700 mm, internal Ø: 700 mm, thickness: 300 mm
    NOTICE! Obey local regulations for the thickness of the pump chamber cover.
  - Concrete quality: C 35/45, reinforcement: Reinforcing steel B500A
  - Distance: 150 mm horizontally and vertically, top and bottom

6.5 Installation



WARNING

Risk of injury without protective equipment!

During work, there is a risk of (serious) injury to feet and hands.

- Wear safety gloves.
- Wear safety shoes.



DANGER

Danger through lone working!

Working in chambers, narrow rooms, and in areas with a risk of falling can be dangerous. Do not work alone.

- Only do this work with a second person.



WARNING

Risk of injury without protective equipment!

During work, there is a risk of (serious) head injury.

- Wear safety helmet (if a lifting equipment is used).



NOTICE

Installation of the pump chamber outside the building in the ground

Obey EN 1610 and local regulations.

- Make sure that the operating space is sufficiently ventilated.

- Make sure that all connection cables are laid correctly. Prevent the connection cables from causing any risk (i.e. tripping, damage during operation). Examine if the cable cross-section and the cable length are sufficient for the selected installation type.
- Toxic or asphyxiating gases can collect during work.
- If toxic or asphyxiating gases collect, go out of the workplace immediately.
- Install lifting accessory on a flat, clean and hard surface. Make sure to access the storage area and installation location easily.
- Attach the chain or wire rope to the slinging points with a shackle. Only use technically approved lifting slings.
- If it is no longer safe to work because of the weather conditions (e.g. ice formation, strong wind), stop work immediately.

6.5.1 Work steps

Install the pump chamber in these steps:

- Prepare the installation
- Excavate the pit
- Install the pump chamber
- Prepare pipe connections
- Install the pump chamber extension:
  - With pump chamber cover class A15 and B125.
  - With pump chamber cover class D400.
- Fill the pit
- Install the pump
- Install the level control device
- Lay the pipes and connection cables
- Install the pump chamber cover
- Install the flush connection and the vacuum relief valve

6.5.2 Preparing the installation

General requirements

- Examine transport damage.
- Remove the transportation lock.
- Examine the scope of delivery.
- Examine that all components are in correct working condition. **CAUTION! Do not install defective components. Defective components can lead to system failures.**
- Put accessories aside and keep them for later use.
- Prepare the installation location:
  - Install only outside of buildings.
  - Do not install next to living and sleeping areas
  - Do not install in peaty soils
  - Keep in mind the maximum height adjustment.
- Prepare the pump chamber cover.
  - Must be ordered separately.
  - Obey EN 124 for the pump chamber cover class: A15, B125 or D400. **WARNING! For class D400, supply a load distribution plate on site.**
  - Install a load distribution plate for pump chamber cover D 400:
  - It must be fully supported by the substructure, not by the pump chamber.
  - Dimensions: External Ø: 1700 mm, internal Ø: 700 mm, thickness: 300 mm
  - Concrete quality: C 35/45, reinforcement: Reinforcing steel B500A
  - Distance: 150 mm horizontally and vertically, top and bottom

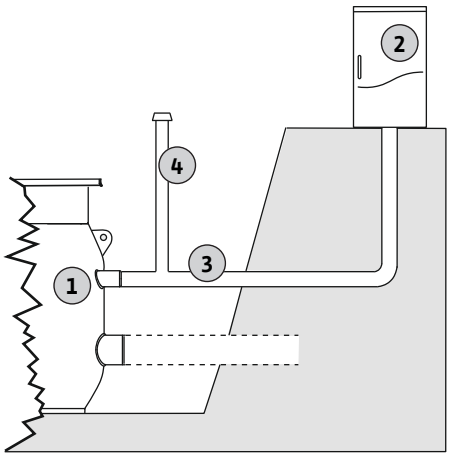

Fig. 5: Installation example for a pump chamber and switch cabinet

Requirements for the cable connection to the switch cabinet

1	Pump chamber
2	Switch cabinet
3	Cable pipe
4	Ventilation pipe

- To control the pump system in view, e.g. manual pumping, control of the switching points, put the switch cabinet with controller next to the pit.
  - Connect the switch cabinet and the pump chamber with a cable pipe of max. 5 m.
  - Connect the cable pipe to the ventilation/cable ducts of the pump chamber.
  - Lay the connection cable through the cable pipe.

6.5.3 Excavating the pit

✓ Preparation work for installation is done.

1. Obey local regulations to excavate the pit, keep these points in mind:
   ⇒ Pump chamber height
   ⇒ Inlet pipe depth
   ⇒ Height of connection port DN/OD 150 or DN/OD 200
   ⇒ Location of the connections
   ⇒ Underlay thickness
   ⇒ Levelling layer thickness
   ⇒ Max. height adjustment of the cover
   ⇒ Pump chamber extension height at max. 500 mm
   ⇒ Make sure that the pit diameter on the ground is 2 m larger than the pump chamber diameter.
   ⇒ Obey the applicable regulations for earthworks in underground engineering and road building (slope angle, installation). If necessary because of the ground water level, prevent damage of the pit using a ground water drawdown.
2. Install the load-bearing underlay correctly and seal it.
3. Add a levelling layer and level off.
4. Prepare the piping provided by the customer.

6.5.4 Installing the pump chamber

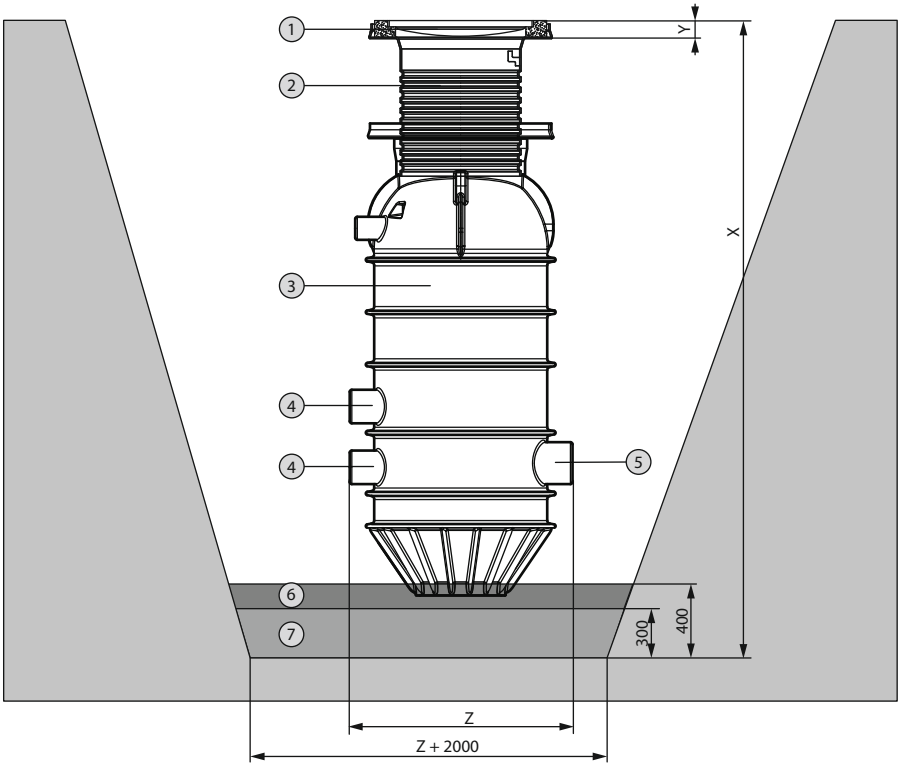

Fig. 6: Pump chamber installation

1	Pump chamber cover	X	Required pit depth
2	Pump chamber extension	Y	Pump chamber cover height
3	Pump chamber	Z	Max. pump chamber diameter
4	Connection port DN 150		
5	Connection port DN 200		
6	Leveling layer		
7	Underlay		

✓ Installation preparation is completed.

✓ The pit is excavated.

✓ The pump chamber cover is prepared.

✓ Installation location is prepared according to the consulting documents. **NOTICE! Be cautious of the direction of the inlet, pressure, ventilation connection and the cable length for the pump and level control device. Make sure that the pump and level control device can be lifted out of the pump chamber.**

1. Examine the floor of the pit for its bearing capacity.
2. Install the load-bearing mineral mixture underlay and seal it.
3. Add a levelling layer of sand and level it off.
4. Prepare the on-site inlet, ventilation and discharge pipes.
5. Install the pump chamber in the pit, align the connections with the on-site piping and drive them in evenly. **NOTICE! Make sure that the ground fins are fully embedded in the levelling layer.**
6. Taking the surrounding surface level as a reference, examine and adjust these if necessary: the plumb-vertical alignment and position of the pump chamber, including the height of the pump chamber cover and pump chamber extension.
   ► The pump chamber is installed. Next step: Setting up the pipe connections.

6.5.5 Preparing pipe connections

Install and lay all pipes so that they are stress-free.

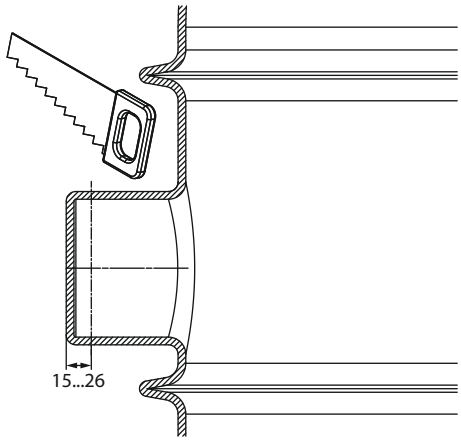

Fig. 7: Pipe connection preparation

1. Cut out the selected connection ports for the inlet and venting pipe and remove burrs.
2. Lay the pipes with a downward slope to the pump chamber. Connect the pipes to the open connection ports using a KG sleeve and lubricants. **NOTICE! To simplify the laying of electrical connection cables for the pump and level control device, use pipe bends in the on-site ventilation line. The maximum angle of the pipe bend is 30°. Also install a tie rod.**
3. Connect the on-site discharge pipe to the discharge port using clamp bolting. Make sure that the routing is frost-proof.
4. Obey the applicable regulations to do a leak test.
   ► Pipe connections are prepared. Next step: Installing the pump chamber extension

6.5.6 Installing the pump chamber extension

CAUTION

Property damage through installation deeper than permitted!

The maximum installation depth includes the pump chamber, extension, concrete rings and chamber cover. If the installation depth is deeper than permitted, deformation or cracking of the pump chamber is possible. Deeper installation of the pump chamber can also result in total loss.

- Do not install the pump chamber deeper than permitted.

6.5.6.1 Installing pump chamber extension when using the A15 and B125 pump chamber cover

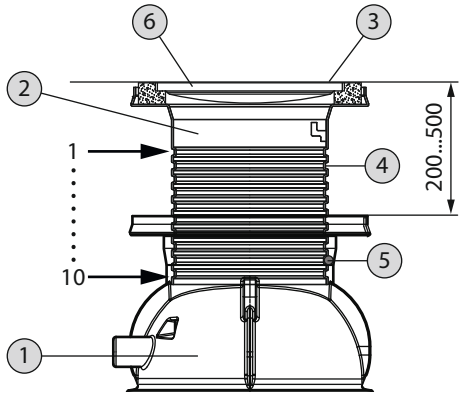

Fig. 8: Pump chamber extension installation

To make up for the height difference between the top edge of the pump chamber and the surface level:

- Install a plastic pump chamber extension, or
- Use concrete adjusting rings.

1	Pump chamber
2	Pump chamber extension
3	Surface level
4	Groove for O-ring
5	O-ring
6	Pump chamber cover

Plastic pump chamber extension

Plastic pump chamber extension can be used to extend the pump chamber by 200 ... 500 mm. The pump chamber extension is made of PE material and can only be ordered as an accessory. The pump chamber extension has grooves, as shown in the table:

Groove	Extension in mm (from top edge of pump chamber to top edge of extension)
3	200
4	250
5	300
6	350
7	400
8	450
9	500

1. Determine the required extension. **NOTICE! Consider the height of the pump chamber cover.**
2. The required dimension is specified by the selected groove at the taper of the extension. Use the applicable groove. **NOTICE! Do not use grooves 1, 2 and 10.**
3. Put the O-ring supplied into the selected groove in the extension.
4. Apply lubricant to the O-ring and the inner side of the taper on the pump chamber. Use washing-up liquid or even water if lubricant is not available.

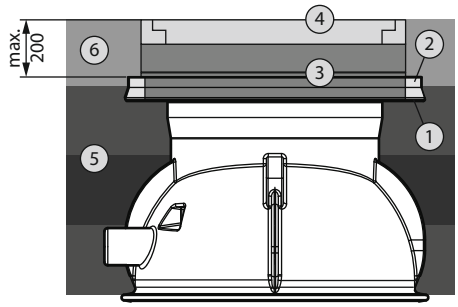

Fig. 9: Concrete adjusting rings installation

5. Slide the pump chamber extension into the pump chamber until the O-ring wedges securely in the cone in the taper. **CAUTION! Do not push the O-ring out of the cone. Make sure that the O-ring slides smoothly into the taper, is not twisted, and is not pushed out of the groove. If necessary, push the O-ring by hand when fitting the extension.**

Concrete adjusting rings

1	Cover flange
2	Filling (sand or mortar)
3	Concrete adjusting rings
4	Pump chamber cover with frame
5	Filling/compacting layer
6	Surface level substructure

To make up for the height to the surface level, standard concrete adjusting rings can be used. Height can be added up to max. 200 mm above the top edge of the pump chamber including the pump chamber cover height. The concrete rings must be provided by the customer.

1. Put the concrete ring centrally on the cover flange.
2. Fill the gap between the concrete ring and the cover flange with sand or mortar.
3. Put more concrete rings centrally.
   To make a solid and full-faced contact between the concrete rings and the cover frame, and to prevent water ingress from ground water or surface water, it is necessary to apply a small layer of mortar to the mating surfaces on the concrete rings and the cover frame.

6.5.6.2 Installing the pump chamber extension when using the D400 pump chamber cover

NOTICE

Using a load distribution plate, a fully sealed pump chamber is not possible.

With a high ground water level and a load distribution plate, increased water ingress into the pump chamber is possible. This water ingress can overload the pump. There is a risk of pump system malfunction.

NOTICE

If a D400 pump chamber cover is used, install a load distribution plate.

- Cut the pump chamber cover flange at the pump chamber or at the pump chamber extension.
- The load distribution plate must be provided by the customer.

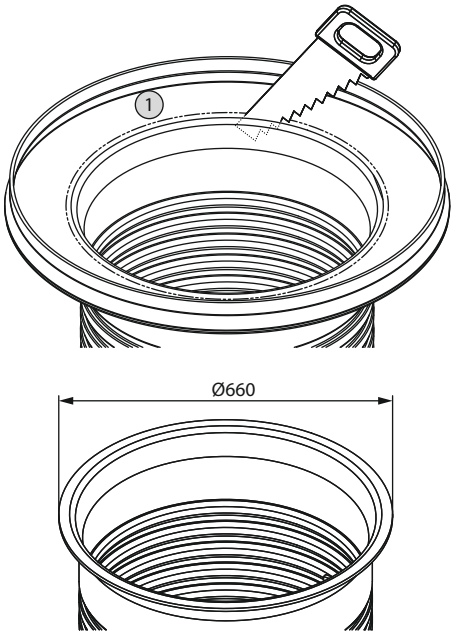

Fig. 10: Removing the cover flange

1	Cover flange

When using the D400 pump chamber cover, a maximum pump chamber extension of 570 mm is possible. The load distribution plate adds 300 mm to the extension. Keep this in mind during installation. **NOTICE! The load distribution plate must be provided by the customer.**

If an extension higher than this minimum 300 mm is required, it is recommended to use standard concrete adjusting rings.

To install the load distribution plate correctly, make sure to cut off the cover flange on the pump chamber.

To meet road traffic requirements, make sure to install a dedicated substructure when filling the pit.**CAUTION! The load distribution plate can be put on the pump chamber, but must be fully put on the dedicated substructure.**

For more details, refer to the “Filling the pit” section.

6.5.7 Filling the pit

When filling the pit, make sure the pump chamber is continuously in a plumb-vertical and constant position. Examine for any deformation or other indications of installation errors. Use a shovel or hand rammer to manually fill and compact the space next to the pump chamber wall, the cover flange, and the extension. Prevent the chamber and any pump chamber extension from rising. If necessary, fill the pump chamber with water before filling and compacting the pit.

6.5.7.1 Filling the pit for the pump chambers with A15 and B125 covers installed

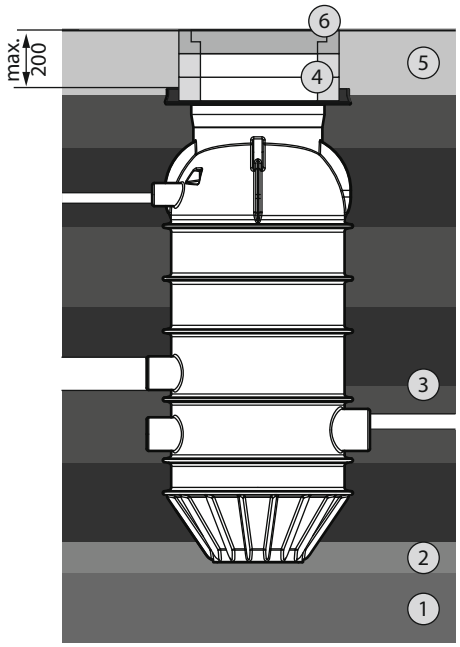

Fig. 11: Pit filling (with A15 and B125 pump chamber cover installed)

1	Underlay
2	Levelling layer
3	Sand/gravel layer without sharp-edged content, grain size: 0...32 mm, max. layer thickness: 300 mm
4	Concrete adjusting rings for pump chamber extension
5	Surface level substructure
6	Pump chamber cover class A15 or B125

With the cover frame, fit the A15 or B125 pump chamber cover directly in the cover flange on the pump chamber or the pump chamber extension. The supplied cover frame is max. 825 mm in outer diameter.

1. Fill and compact the pit one layer (max. thickness: 300 mm) at a time with coarse-grained soil (sand/gravel with no sharp-edged content, grain size: 0 ... 32 mm) all around to an equal height. Manually compact (with a shovel, hand rammer) the areas directly next to the pump chamber wall, the cover flange of the pump chamber, and the pump chamber extension. Make sure that the pump chamber is in a plumb-vertical direction and without deformation. **CAUTION! Keep the top sand/gravel layer (compacting layer) at the same height as the cover flange. CAUTION! Obey the local standards to embed, fill and seal the piping.**
2. Align the surface level, including substructure, with the pump chamber cover. **CAUTION! If the all-around ground is cohesive material (e.g. topsoil), fill and compact the "substructure to surface level" with the material with max. grain size of 20 mm for better assimilation.**

6.5.7.2 Filling the pit for the pump chamber with D400 cover installed

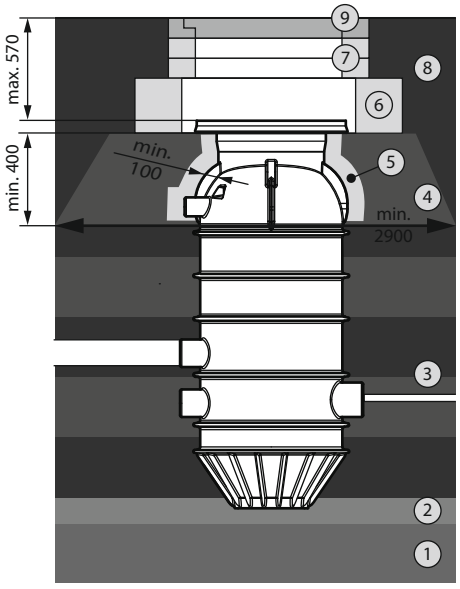

Fig. 12: Pit filling (with D400 pump chamber cover installed)

1	Underlay
2	Levelling layer
3	Sand/gravel layer without sharp-edged content, grain size: 0...32 mm, max. layer thickness: 300 mm
4	Substructure for traffic surface, at least gravel or rubble layer, min. layer thickness: 400 mm, friction angle: >37.5°
5	Sand layer, max. grain size: 16 mm, minimum layer thickness: 100 mm
6	Load distribution plate
7	Concrete adjusting rings for pump chamber extension
8	Traffic surface substructure
9	Class D400 pump chamber cover

1. Fill and compact the pit with coarse-grained soil in layers and make sure that each layer is not thicker than 300 mm. Use sand or gravel without sharp edges, with a grain size ranging from 0 ... 32 mm, and apply evenly to keep a equal height up to the base of the substructure. Manually compact (with a shovel, hand rammer) the areas directly next to the pump chamber wall. Make sure that the pump chamber is in a plumb-vertical direction and without deformation. **CAUTION! Keep the top sand/gravel layer (compacting layer) at the same height as the cover flange. CAUTION! Obey the local standards to embed, fill and seal the piping.**
2. Install the substructure for the load distribution plate. Follow the same procedure as the substructure for traffic surfaces. Obey the same applicable regulations for the installation of substructure for traffic surfaces. Basic requirements:
   Gravel or rubble layer has a layer thickness of min. 400 mm and a friction angle of >37.5°.
   The substructure, if uneven, has a minimum outer diameter of 2.90 m at the base.
   CAUTION! Make sure to use a protective sand layer (max. grain size: 16 mm) of min.100 mm between the substructure for the load distribution plate and the body of the pump chamber or the pump chamber extension.
3. Put the load distribution plate centrally.**WARNING! Make sure that the load distribution plate has a full-faced contact with the substructure.**
4. If a pump chamber extension with concrete rings is required, now put the concrete rings centrally on the load distribution plate. To make a solid and full-faced contact between the concrete rings and the cover frame, and to prevent water ingress from ground water

or surface water, it is necessary to apply a small layer of mortar to the mating surfaces on the concrete rings and the cover frame.

5. Put the cover flange centrally on the load distribution plate or on the last concrete ring.
6. Align the surface level, including substructure, with the pump chamber cover.

6.5.8 Installing the pump

NOTICE! Obey the installation and operating instructions for the pump.

Pump types: Rexa MINI3-S03, Rexa FIT-S03, Rexa PRO S03

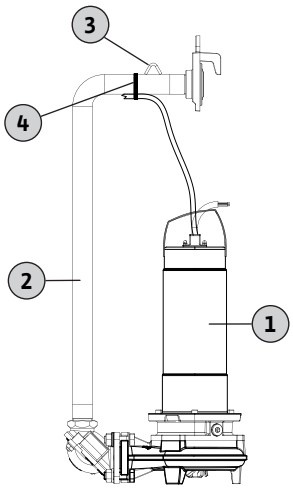

Fig. 13: Pump installation

1	Pump	3	Attachment for chain
2	Discharge pipe	4	Cable tie

1. Remove coarse contaminants in the pump chamber.
2. Outside the pump chamber, connect the pump and discharge pipe using the supplied assembly materials.
3. Attach the connection cable to the horizontal section of the discharge pipe using the supplied cable tie. Make sure to put the cable from the pump to the cable tie with little tension and no looseness.
4. Close the shut-off valve.
5. Hang the chain from the discharge pipe and lower the pump and discharge pipe into the pump chamber until the two couplings are fully engaged. **NOTICE! When lowering the pump, guide it and prevent it from getting caught on the pump chamber fittings. WARNING! When hanging the chain, obey the installation and operating instructions for the chain.**
6. Attach the connection cable to the discharge pipe using the supplied cable tie.
7. After the pump is installed, examine that it is hanging freely and with sufficient clearance from the pump chamber wall. **NOTICE! For a problem-free installation of the pump, make sure to turn the pump laterally by about 90° so that it can be guided through the cross beam.**
8. Detach the chain from the lifting equipment and hang it on the chain hooks in the pump chamber. **DANGER! Incorrect handling of the pump can cause damage. Only hang the pump with a chain, not with the connection cable.**

Pump type: Rexa MINI-V04

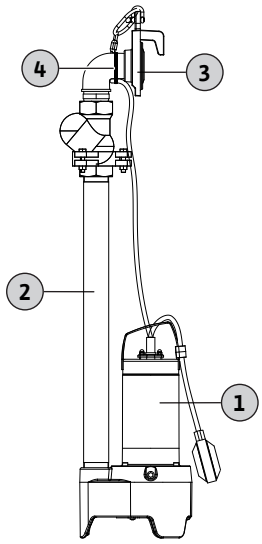

Fig. 14: Pump installation

1	Pump	3	Attachment for chain
2	Discharge pipe	4	Cable tie

1. Remove coarse contaminants in the pump chamber.
2. Outside the pump chamber, connect together the pump and discharge pipe using the supplied assembly materials.
3. Attach the connection cable to the horizontal section of the discharge pipe using the supplied cable tie. Make sure to put the cable from the pump to the cable tie with little tension and no looseness.
4. Close the shut-off valve.
5. Hang the chain from the discharge pipe and lower the pump and discharge pipe into the pump chamber until the two couplings are fully engaged. **NOTICE! When lowering the pump, guide it and prevent it from getting caught on the pump chamber fittings. WARNING! When hanging the chain, obey the installation and operating instructions for the chain.**
6. Attach the connection cable to the discharge pipe using the supplied cable tie.
7. After the pump is installed, examine that the attached float switch can move freely in the pump chamber.
8. Detach the chain from the lifting equipment and hang it on the chain hooks in the pump chamber. **CAUTION! Increct handling of the pump can cause damage. Only hang the pump with a chain, not with the connection cable.**

6.5.9 Installing the level control device

NOTICE! Observe the installation and operating instructions for the level control device.



DANGER

Explosion hazard through incorrect installation of level control!

If the level control is installed in a potentially explosive atmosphere, there is a risk of explosion if the signal transmitters are incorrectly connected.

- Connect all signal transmitters with an Ex cut-off relay or a Zener barrier.
- A qualified electrician must do the electrical work.



CAUTION

System malfunction through incorrect installation of the level controller.

To prevent the pumping station from malfunctioning, follow these points:

- To prevent backflow into the inlet, set the maximum level below the inlet.
- Do not install the signal transmitters directly in the inlet.
- Make sure the pump's current operating mode matches its designed mode. Obey the start and stop times for S2 or S3 operation mode.

The water level can be measured with these devices:

- Dynamic pressure bell
- Level sensor
- Float switch

Dynamic pressure bell

A dynamic pressure bell measures water levels by checking the static pressure in the pump chamber. Make sure that the dynamic pressure bell emerges after each pumping procedure to get ventilated. Alternatively, a bubbling-through system can be used where a small compressor continuously pumps air into the dynamic pressure bell.

In addition, it is recommended to install a second dynamic pressure bell for autarkic measuring and signalling of the high water alarm.

Level sensor

A level sensor measures water levels using a diaphragm. Make sure that the diaphragm (the lower section of the level sensor) stays constantly immersed. The level sensor cannot be put on the base of the pump chamber.

Float switch

Float switches measure water levels using floats. Make sure that the float switches have sufficient space to move and do not hit into the pump chamber.

NOTICE! The signal transmitters used depend on the switchgear used.

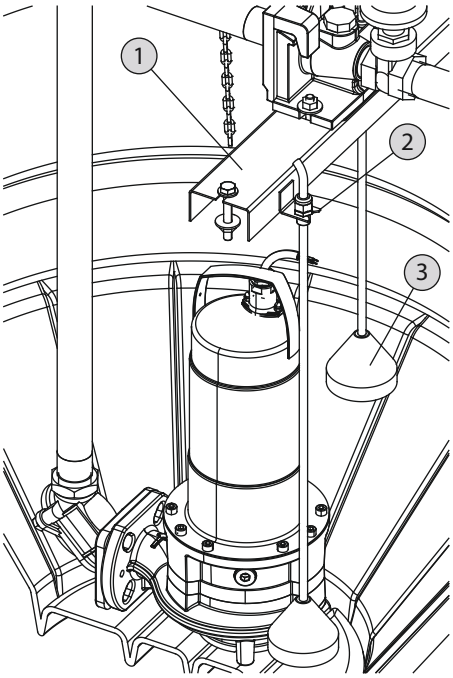

Fig. 15: Attaching signal transmitters

1	Cross beam
2	Holder for dynamic pressure bell and level sensor
3	Dynamic pressure bell

1. Fit the dynamic pressure bell and the level sensor directly into the holder on the cross beam from above, using the accessories supplied.
2. Attach the float switch to the vertical discharge pipe using cable ties. For fault-free level measurement, a free cable length of about 250 mm is required.
3. To prevent deposits effectively, make sure to replace the fluid regularly. It is recommended to use the switching points for the lower inlet. The dedicated switching points are shown in the following tables.

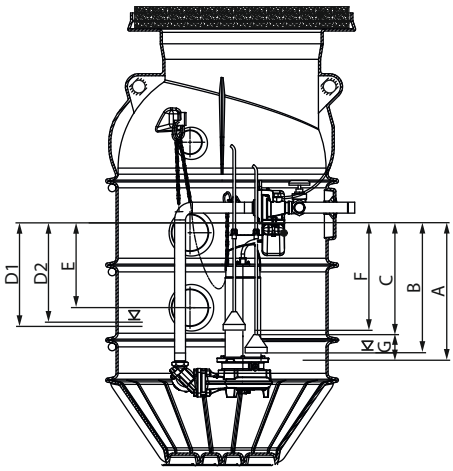

Fig. 16: Switching points for single pump operation

Dimension	Description	Rexa MINI3-S03	Rexa FIT-S03	Rexa PRO-S03
A	Pump off	710	680	680
B	Lower edge of dynamic pressure bell 1	660	630	630
C*	“Pump off” signal	590	560	560
D1	Pump on	400	400	400
E	High water: Alarm signal and “Pump on”	330	330	330
F	Lower edge of dynamic pressure bell 2 (high water alarm)	550	550	550
G	Level fall during follow-up time	120	120	120

Table 1: Switching points for single pump operation

* Switching point C: Set “Pump off” signal when using dynamic pressure bell and level sensor; then set follow-up time up to “dimension A” (pump off); set follow-up time if there is no inlet.

Dimension	Description	Rexa MINI3-S03	Rexa FIT-S03	Rexa PRO-S03	Rexa MINI3-V04
A	“Pump off”	560	530	530	550
B	Lower edge of dynamic pressure bell 1	510	480	480	500
C*	“Pump off” signal	440	410	410	430
D1	“Pump 1 on”	400	400	400	400
D2	“Pump 2 on”	360	360	360	360
E	High water: Alarm signal and “Pump on”	330	330	330	330
F	Lower edge of dynamic pressure bell 2 (high water alarm)	530	500	500	520
G	Level fall during follow-up time	120	120	120	120

Table 2: Switching points for dual pump operation

* Switching point C: Set “Pump off” signal when using dynamic pressure bell and level sensor; then set follow-up time up to “dimension A” (pump off); set follow-up time if there is no inlet.

If a higher gross volume is required due to a higher inflow, these switching points can also be used for the upper inlet.

Description	Single pump operation	Switching point
“Pump 1 on” at upper inlet	110	130
“Pump 2 on” at upper inlet	–	90
High water at upper inlet: all pumps on	60	60

Table 3: Switching points for upper inlet

Alarm signal for high water level

To prevent operation failure of the pump chamber, it is recommended to use a high water alarm. Make sure that the switchgear have the necessary function.

6.5.10 Laying the connection cables

1. Lay all connection cables for the pump and level control device through the ventilation/cable bushing connection. **NOTICE! Make sure that the connection cables are sufficiently long for the pump and the level control device to be removed from the pump chamber when necessary.**
2. Hang all connection cables (NOT the pressure hose for the dynamic pressure bell) over the chain hooks in the pump chamber. If necessary, to prevent the connection cables from getting into the fluid or into the pump suction opening, connect them using the cable ties supplied. Do not squash or kink the cables. Keep them away from sharp edges.
3. Clean the pump chamber and supply lines of coarse contaminants.

6.5.11 Installing the pump chamber cover



WARNING

Risk of injury from falling into an open pump chamber!

Open pump chambers on the construction site are dangerous for other persons. These persons cannot see the open pump chamber and can fall in. There is a risk of serious injuries. Follow these points:

- Always close the pump chamber.
- Make sure that the chamber cover is securely fitted.
- If it is not possible to close the pump chamber, mark the work area.

1. Fit the pump chamber cover in the cover flange with the cover frame (max. outer diameter: 825 mm). **NOTICE! Make sure that the pump chamber cover is put centrally.**
2. Apply a small layer of mortar for a stable and full-faced contact in the cover flange.
3. Fill the gap between the pump chamber cover and the cover flange with mortar or an equivalent material.

Class in accordance with EN 124	Dimensions
A15	Ø785x80 mm
B125	Ø750x120 mm
D400	Ø785x160 mm

Table 4: Dimensions

6.5.12 Installing the flush connection and vacuum relief valve

A flush connection can be installed for flushing the discharge pipe using compressed air or water pressure. Also, a vacuum relief valve can be installed to prevent the pump chamber from being drained dry. These two components are available as accessories.

6.5.12.1 Installing the flush connection

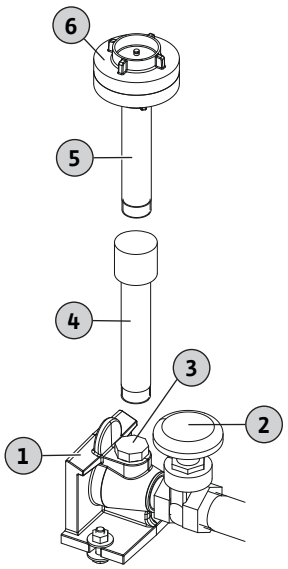

Fig. 17: Flush connection installation

1	Surface coupling
2	Gate valve
3	Flush connection (1")
4	Flush connection extension (L = 300 mm)
5	Flush connection (L = 300 mm)
6	Flush connection cover (dummy coupling Storz C-52)

✓ The flush connection is installed directly on the surface coupling.

✓ The inlet is connected using a Storz coupling C-52.

1. Remove the sealing plug on the 1" connection on the surface coupling.
2. Apply a standard sealant (hemp, Teflon tape) around the thread on the flush connection.
3. Screw the flush connection into the connection on the surface coupling.
4. Remove the dummy coupling on the flush connection and connect the inlet.
   If the flush connection is positioned too low, it can be adjusted using an extension. A dedicated number of extensions can be screwed together depending on the required height.
   CAUTION! Make sure to seal each thread connection using a standard sealant (hemp, Teflon tape).

6.5.12.2 Installing vacuum relief valve

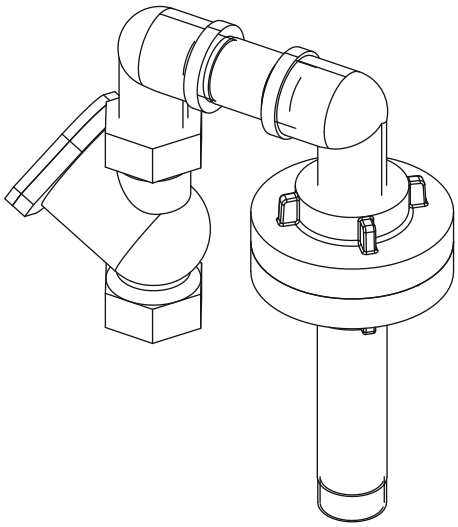

Fig. 18: Vacuum relief valve installation

If the end of the discharge pipe is lower than the pump chamber, negative pressure in the discharge pipe can cause the pump chamber to be drained dry. Install a vacuum relief valve to prevent the pump chamber from being drained dry.
NOTICE! The vacuum relief valve is fitted on the Storz coupling, meaning it can only be installed together with the flush connection.
NOTICE! For correct functioning of the gate valve and safe installation/dismantling of the pump at any time, align the vacuum relief valve during installation.

6.6 Electrical connection

DANGER

Danger of death through electrical shock!

Incorrect behaviour during electrical work results in death by electric shock.

- Only a qualified electrician must do the electrical work.
- Obey local regulations.

- Obey local regulations to earth the pump chamber.
- Obey local regulations to make potential equalisation.
- Obey the installation and operating instructions for each component to make the electrical connection.
- Install the mains connection and switchgear at a flood-proof height.
- To control the pump system in view, e.g. manual pumping, control of the switching points, put the switch cabinet with controller next to the pit.
  - Connect the switch cabinet and the pump chamber with a cable pipe of max. 5 m.
  - Connect the cable pipe to the ventilation/cable ducts of the pump chamber.
  - Lay the connection cable through the cable pipe.

7 Commissioning

CAUTION

Property damage through rough debris!

Rough debris in the pump chamber can lead to a system malfunction.

- Before system start-up, remove rough debris from the pump chamber.

NOTICE

Documentation of products provided on site

- Obey the installation and operating instructions for the connected products (sensors and pumps).
- Refer to the system documentation for the commissioning measures.

7.1 Operation

Pump chamber with a pump with fitted float switch

Each pump is directly controlled by the fitted float switch. After the plug has been inserted into the socket, the related pump is ready for operation and works in automatic mode.

It is recommended to use a dedicated switch for the related socket. This permits the system to be switched conveniently.

Pump chamber with a pump, switchgear and separate level control

The unit is operated by the switchgear. For information on the operation and displays of the switchgear, refer to the installation and operating instructions for the switchgear.

CAUTION

System malfunction through incorrect switchgear operation mode!

When the plug is connected to the socket, the switchgear starts in the operation mode set before. An incorrect operation mode can result in system malfunction.

- Do not put the plug into the socket. Read the operating instructions of the switchgear.
- Only put the plug into the socket when you know how to use the switchgear.

7.2 Personnel qualifications

- Operation/control: The staff knows how the system works.

7.3 Operator responsibilities

- Supply the installation and operating instructions. Keep the installation and operating instructions easy to access.
- Supply these instructions in the language which the staff can read and understand.
- Make sure that the staff reads and understands the installation and operating instructions.
- Make sure that all on-site safety devices are active and working correctly.
- Make sure that the pump chamber and the installed pump are the correct ones for the given operating conditions.

7.4 Test run

Do a test run before putting the pump chamber into operation. A test run examines the correct functioning of the pump chamber. If necessary, adjust the switching points and the follow-up time of the pump.

✓ Pump chamber is installed correctly.

1. Remove the pump chamber cover.
2. Activate the pumping station:
   ⇒ Pumping station **without** a switchgear: Put the plug into the socket.
   ⇒ Pumping station **with** a switchgear: Activate the switchgear at the main switch. Set automatic mode.
3. Open the shut-off valve in the discharge line.
   ⇒ **NOTICE! The shut-off valve in the inlet stays closed.**
4. Fill the pump chamber with water through the chamber opening.
   ⇒ **NOTICE! Do not shoot the water jet directly above the float switch.**
5. Pump is switched on and off using the level control.
   ⇒ Do no less than two full pumping procedures of all pumps for a test run.

⇒ For two-pump chamber: The pumps must run in alternation, with one pump running for each pumping operation.

⇒ Fill the discharge pipe fully with water to examine the duty point. Do more test runs until the discharge pipe is fully filled.

6. Fit the chamber cover and prevent it from non-approved opening.

► The test run is completed.

► If the pump chamber **is put into operation**: Keep shut-off valve open in the **discharge pipe**.

► When the pump chamber **is in standby mode**: Close the shut-off valve in the **discharge pipe**.

7.5 Operation

The pumping station operates in automatic mode by default and is switched on and off using the integrated level control device.

✓ Commissioning is done.

✓ Test run is done successfully.

✓ The operation and functioning of the pumping station are known.

✓ The discharge pipe is fully filled with water.

1. Activate the pumping station:
   ⇒ Pumping station **without** a switchgear: Put the plug into the socket.
   ⇒ Pumping station **with** a switchgear: Activate the switchgear at the main switch. Set the automatic mode.
2. Open the shut-off valve in the inlet and discharge pipe.
   ► The pump chamber operates in automatic mode and the pump is controlled depending on the water level.

7.6 During operation

- Open the shut-off valve in the inlet and discharge line.
- The maximum inlet is less than the maximum output of the pumping station.
- Do not remove the chamber cover.
- Make sure that the pump chamber is sufficiently ventilated.
- If the outside temperature stays below 0 °C for a long time, there is a risk of frost in the pump chamber when the water exchange is not sufficient:
  – Apply insulation measures above the chamber cover.
  – Decommission the pump chamber.

8 Shutdown/dismantling

Wear this protective equipment:

- Safety shoes: Protection class S1 (uvex 1 sport S1)
- Safety gloves: 4X42C (uvex C500 wet)
- Safety helmet (EN 397): conforms to the standard and protects against lateral deformation
  (If lifting accessories are used)

If you touch hazardous fluids while working, also wear this protective equipment.

- Safety glasses: uvex skyguard NT
  – Marking of frame: W 166 34 F CE
  – Marking of eyeglass-lens: 0-0.0* W1 FKN CE
  * The safety class for filters is not necessary for this work.
- Respiratory mask: Half mask 3M series 6000 with filter 6055 A2

The listed protective equipment is the necessary basic equipment. Obey the factory regulations.

8.1 Operator responsibilities

- Obey local accident prevention and safety regulations.
- Supply protective equipment. Make sure that staff wears protective equipment.
- Ventilate closed rooms.
- Toxic or asphyxiating gases can collect in closed rooms or buildings. Wear protective equipment (e.g., gas detector). Obey the factory regulations.
- Do not work alone in closed rooms. Only do this work with a second person.
- Obey regulations for working below suspended loads when using lifting accessories.

8.2 Shutdown

1. Close the shut-off valve in the inlet pipe.
2. Switch the switchgear to standby mode.
3. Drain the pump chamber.
   Activate the pump in manual mode and drain the pump chamber.
4. Close the shut-off valve in the discharge pipe.
5. Pump out the leftover fluid through emergency draining.
6. Switch off the pumping station:

⇒ Pumping station **without** a switchgear: Pull the plug out of the socket.
⇒ Pumping station **with** a switchgear: Switch off the switchgear at the main switch.
⇒ **NOTICE! Prevent the pumping station from non-approved reactivation.**
► The pumping station is decommissioned.

If the pump chamber is out of operation for a long time, do a “test run” at regular intervals (quarterly).

8.3 Cleaning and disinfection

✓ The pump chamber is decommissioned.
1. Remove the chamber cover.
2. Activate the pumping station:
   ⇒ Pumping station **without** a switchgear: Put the plug into the socket.
   ⇒ Pumping station **with** a switchgear: Activate the switchgear at the main switch. Set the automatic mode.
3. Open the shut-off valve in the discharge pipe.
4. Flush the discharge pipe with the flush connection attached. Disconnect the flush connection.
5. Flush the inside of the pump chamber with clean water from top to bottom through the chamber opening.
6. Disinfect the pump chamber.
7. Drain the pump chamber.
8. Do more steps 5 to 7 until the pump chamber, pump and level control device are cleaned.
9. Close the shut-off valve in the discharge pipe.
10. Pump out the leftover fluid through emergency draining.
11. Decommission the pumping station.
12. Let the pumping station dry out.
13. Fit the chamber cover.
    ► The pump chamber is cleaned and disinfected. Each component can now be removed.

8.4 Pump removal



DANGER

Danger through bacterial infection!

The pump chamber is used for collecting and pumping sewage. There can be bacteria and hazardous germs. Follow these points:

- After removal, disinfect the pump chamber.
- Obey the factory regulations.



DANGER

Danger of death through electrical shock!

Incorrect behaviour during electrical work results in death by electric shock.

- Only a qualified electrician must do the electrical work.
- Obey local regulations.



DANGER

Danger through lone working!

Working in chambers, narrow rooms, and in areas with a risk of falling can be dangerous. Do not work alone.

- Only do this work with a second person.



WARNING

Risk of burns from hot surfaces!

During operation, the motor housing can get hot. There is a risk of skin burns if the component is touched.

- Cool down the motor to ambient temperature after switching off.

The pump can be removed from the pump chamber for maintenance work on the pump.

✓ The pump chamber is decommissioned.
✓ The pump chamber including all components is disinfected.
✓ Protective equipment is used.
✓ The working area is cordoned off.

1. Remove the chamber cover.
2. Loosen the union nut on the shut-off ball valve.
3. Release the discharge pipe from the shut-off ball valve.
4. Remove the pump.
   ⇒ **NOTICE! Attach a drawing wire to the connection cable of the pump. Pull the drawing wire into the chamber when removing the pump.**
5. Fit the chamber cover.
   ► The pump is removed.

9 Maintenance and repair

Pump chamber

- Chamber cover gasket
  Replace it each time the chamber cover is removed.
- Surface coupling
  Examine the pumps are working correctly each time after the pumps are removed and refitted.

Pump

- Obey the manufacturer's installation and operating instructions for maintenance work.

Switchgear

- Obey the manufacturer's installation and operating instructions for maintenance work.

Level control

- Obey the manufacturer's installation and operating instructions for maintenance work.

10 Spare parts

Order spare parts through customer service. To prevent return queries and incorrect orders, always supply the serial or article number. **Subject to change without prior notice.**

11 Faults, causes and remedies

If faults occur, obey the installation and operating instructions for the each components.

12 Disposal

12.1 Protective clothing

Obey local regulations to dispose of worn protective clothing.

12.2 Information on the collection of used electrical and electronic products

To prevent damage to the environment and human health, make sure to dispose of and recycle this product correctly.



NOTICE

Do not dispose of the product in domestic waste!

This symbol means that the product must not be disposed of in domestic waste. The symbol is applied to the product or its packaging.

Follow these points for a correct disposal of the product:

- Only return the product to a designated and permitted collection point.
- Obey local regulations.

Consult your local municipality, the nearest waste disposal site, or your retailer for a correct disposal. For additional information on recycling, visit http://www.wilo-recycling.com.





wilo



Local contact at
www.wilo.com/contact

WILO SE
Wilopark 1
44263 Dortmund
Germany
T +49 (0)231 4102-0
T +49 (0)231 4102-7363
wilo@wilo.com
www.wilo.com

Pioneering for You