Data Sheet | Item Number: 774-9994/116-502

pre-assembled connecting cable; Eca; Socket/open-ended; 4-pole; Cod. A; H05Z1Z1-F 4G 1.5 mm²; 5 m; 1,50 mm²; white

https://www.wago.com/774-9994/116-502

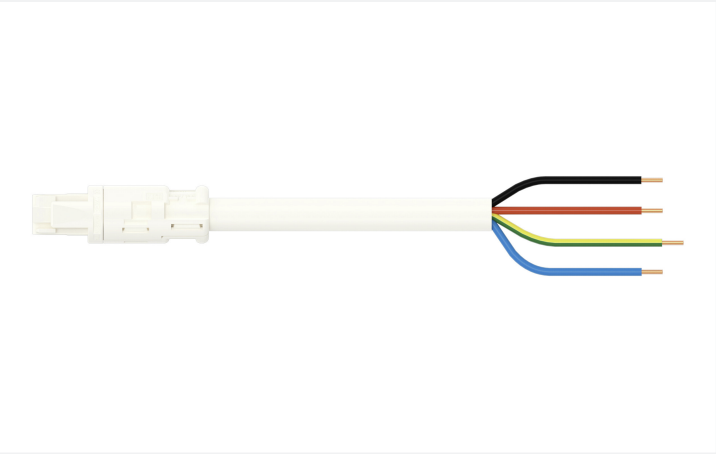

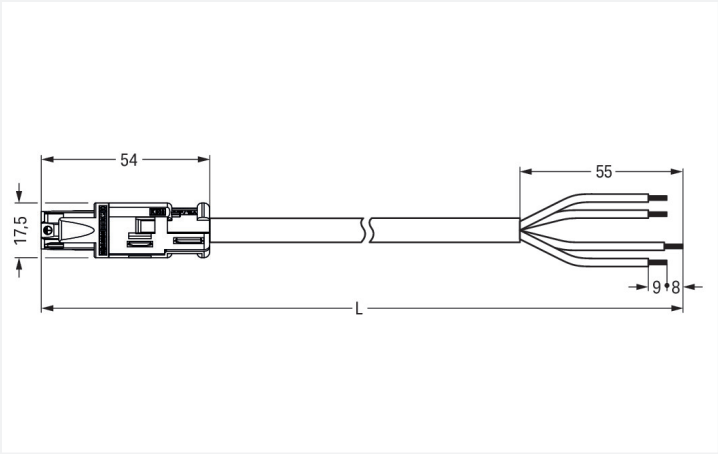

Color: white

Dimensions in mm

Cable assembly *WINSTA*® RD 4-pole

The *WINSTA*® RD cable assembly A coding supports rapid, correct installation. The pluggable installation connectors with spring pressure connection technology function entirely without screw connections. They allow fast, efficient, error-free installation in numerous possible uses. For greater security in electrical installations, the pluggable installation connector is equipped with mechanical protection against mismating. The pluggable installation connector is protected in accordance with protection type IP20 (When mated: IP2xC (These compact connectors are not designed for use in open, easily accessible areas!)). This means that users' fingers will never come into contact with live elements. *WINSTA*® RD: Solutions from this product line fit into drill holes and conduits with diameters up to 20 mm. This product meets all the mandatory fire protection requirements of fire class E; as a result it can be used in domains where fire safety is relevant. Eliminating halogens as an additive in the manufacture of this cable assembly noticeably improves fire safety and minimises environmental contamination.

Pluggable connections instead of screw connections – cable assemblies from WAGO

The cable is pre-assembled with a socket and a free end. WINSTA® is the pluggable connection system that is optimally tailored to the strict requirements of electrical installation. It ensures fast, secure and, above all, error-free installation of components and cables. Choose durability and quality – with locking lever from WAGO makes the installation of electrical components significantly easier.

- pluggable installation connectors with protection against mismating
- products perfectly tailored to your requirements guarantee safe use
- with A coding for use in a large number of general mains applications
- custom-engineered solutions
- fast, secure installation

Notes

Note	Cables with a different fire class can be found in the eShop.

Electrical data

Ratings per	IEC/EN 60664-1		
Overvoltage category	III	III	II
Pollution degree	3	2	2
Nominal voltage	250 V	-	-
Rated impulse withstand voltage	4 kV	-	-
Rated current	16 A	-	-

General information	
Note on contact resistance	approx. 1 mΩ of contact resistance approx. 0.25 mΩ contact transition plug/socket

Connection Data

Total number of potentials	4
Conductor preparation	ultrasonically tip-bonded

Connection 1

Strip length	9 mm / 0.35 inches
Pole number	4
Wire cross-section	1.5 mm²
Strip length (outer insulation)	55 mm
Connection type	Socket - free end

Physical data

Width	17.5 mm / 0.689 inches
Height	17.5 mm / 0.689 inches
Total length	5 m

Mechanical data

Use	General mains applications
Coding	A
Variable coding	No
Marking	N ⏚ 2 1
Mating force of a plug-in connection	Approx. 30 … 70 N (depending on pole number)
Retention force of a plug-in connection	when locked: > 80N
Unmating force of a plug-in connection	Unlocked: approx. 30 … 70 N (depending on pole number)
Number of mating cycles	200, without resistive load
Connection type	Socket - free end
Type of pre-assembled cable	Connecting cable
Cable type	H05Z1Z1-F 4G1.5
Protection type	IP20; When mated: IP2xC (These compact connectors are not designed for use in open, easily accessible areas!)

Plug-in connection

Mismating protection	Yes
Note on mismating protection	All *WINSTA*® components are 100% protected against mismating when: a.) plugging different numbers of poles b.) plugging while incorrectly rotated c.) plugging while laterally staggered
Locking lever	Yes
Locking of plug-in connection	Locking lever

Material data

Note (material data)	Information on material specifications can be found here
Color	white
Insulation material (main housing)	Polyamide (PA66)
Fire class per EN 50575	E_{ca}
Contact material	Copper or copper alloy; surface-treated
Contact Plating	Tin
Fire load	149.413 MJ
Connector color	white
Strain relief color	white
Sheathed cable color	white
Printing color of sheathed cable	black
Halogen-free	Yes
Silicon-free	Yes
Sheath material	Halogen-free
Rubber cable	No

 Continued on next page

Material data

Weight	595.4 g
Copper weight of the raw cable	0.058 kg/m

Environmental requirements

Processing temperature	-5 … +40 °C
Continuous operating temperature	-35 … +85 °C
Note on continuous operating temperature	Cable for temperatures ≤ 70 °C (including halogen-free) Insulating parts for temperatures ≤ 105 °C

Commercial data

PU (SPU)	1 pcs
Packaging type	unpacked
Country of origin	DE
GTIN	4045454346188
Customs tariff number	85444290900

Product Classification

UNSPSC	26121629
eCl@ss 10.0	27-44-06-04
eCl@ss 9.0	27-44-06-04
ETIM 9.0	EC002587
ETIM 10.0	EC002587
ECCN	NO US CLASSIFICATION

Environmental Product Compliance

RoHS Compliance Status	Compliant,No Exemption

Approvals / Certificates

General approvals

Approval	Standard	Certificate Name
CCA DEKRA Certification B.V.	-	NTR NL 6374
CCA DEKRA Certification B.V.	EN 61535	NTR NL-7969
CCA DEKRA Certification B.V.	EN 61984	NTR NL-7848
KEMA/KEUR DEKRA Certification B.V.	EN 61535	71-123229
KEMA/KEUR DEKRA Certification B.V.	EN 61984	71-114944
KEMA/KEUR DEKRA Certification B.V.	-	2118353.01

Declarations of conformity and manufacturer's declarations

Approval	Standard	Certificate Name
EU-Declaration of Conformity WAGO GmbH & Co. KG	-	-
UK-Declaration of Conformity WAGO GmbH & Co. KG	-	-

 Continued on next page

Downloads

Environmental Product Compliance

Compliance Search
Environmental Product Compliance 774-9994/116-502

Documentation

Bid Text			
774-9994/116-502	19.02.2019	xml 3.04 KB	
774-9994/116-502	08.01.2015	doc 24.00 KB	

CAD/CAE-Data

CAE data
EPLAN Data Portal 774-9994/116-502
WSCAD Universe 774-9994/116-502