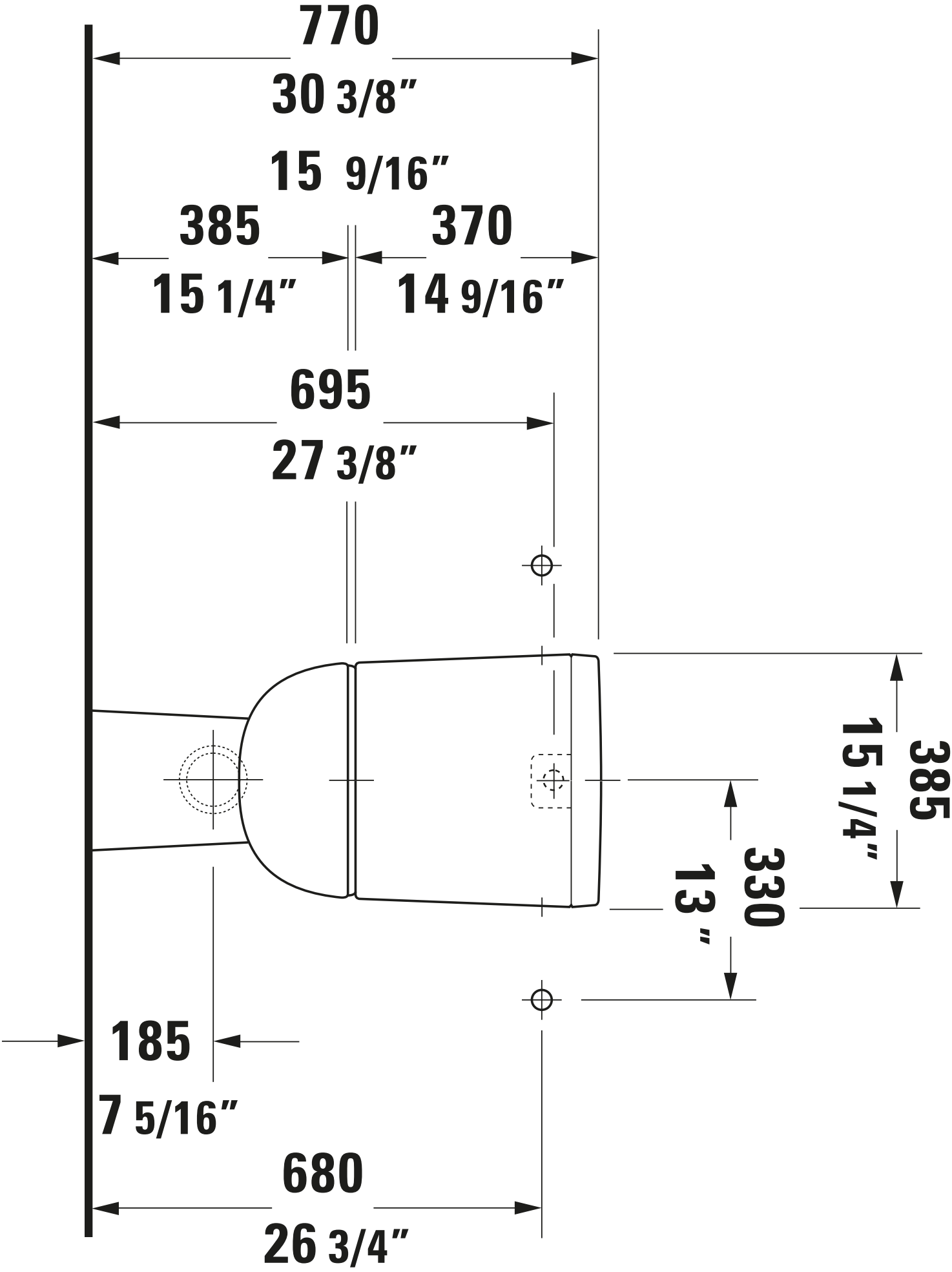
770
30 3/8"
15 9/16"
385
15 1/4"
370
14 9/16"
695
27 3/8"
385
15 1/4"
330
13"
185
7 5/16"
680
26 3/4"