Lever - Chrome

SPARE PARTS

90 20 66 029 00 Product version from 4/1/2025

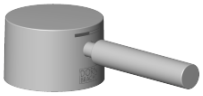

Chrome	90 20 66 029 00-00
Brushed Platinum	90 20 66 029 00-06
Dark Chrome	90 20 66 029 00-19
Light Gold (PVD)	90 20 66 029 00-26
Brushed Light Gold (PVD)	90 20 66 029 00-27
Matte Black	90 20 66 029 00-33
Brushed Dark Brass (PVD)	90 20 66 029 00-39
Brushed Bronze (PVD)	90 20 66 029 00-42
Brushed Champagne (22kt Gold)	90 20 66 029 00-46
Champagne (22kt Gold)	90 20 66 029 00-47
Brushed Chrome	90 20 66 029 00-93
Brushed Dark Platinum	90 20 66 029 00-99

We reserve the right to change designs, product range and technical specifications without prior notice.
More information can be found at: www.dornbracht.com +49 (0) 2371 8899 900 mail@dornbracht.com

90 20 66 029 00 Product version from 4/1/2025

Lever - Chrome

90 20 66 029 00 Product version from 4/1/2025

Parts for other finishes can be found here: Brushed Platinum

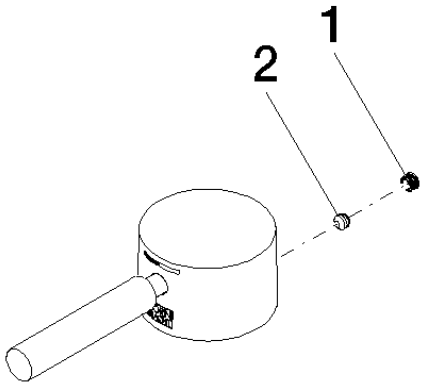

Spare parts list

No.	Item Number	Name	Quantity used	Delivery time
1	90 31 20 109 00 90	Plug -	1.00	14
2	90 31 11 063 00 90	Mounting Threaded pin with hexagon socket with cup point M5 x 4 mm -	1.00	14

We reserve the right to change designs, product range and technical specifications without prior notice.
More information can be found at: www.dornbracht.com +49 (0) 2371 8899 900 mail@dornbracht.com