Technical data sheet

ISO nail clip 2016, light grey

Item number: 2228211



ISO nail clip, short design

HALOGEN FREE CE

PP Polypropylene

Master data

Item number	2228211
Type	2016 40 LGR
Description 1	ISO nail clip
Manufacturer	OBO
Dimension	16mm, L40
Colour	Light grey; RAL 7035
Material	Polypropylene
Smallest sales unit	50
Unit of quantity	Piece
Weight	0.323 kg
Weight unit	kg/100 pc.
CO2 Footprint (GWP) Cradle-to-Gate	0,0121 kg CO2e / 1 Piece

Technical data sheet

ISO nail clip 2016, light grey

Item number: 2228211

Dimensions

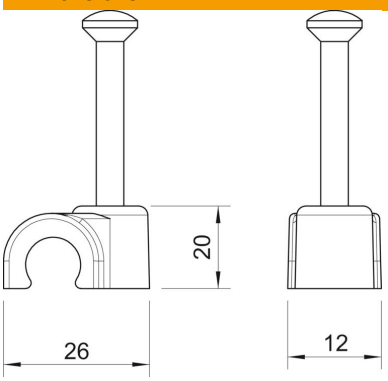

Dimension B	12 mm
Dimension H	20 mm
Dimension L	26 mm

Technical data

Double clip	no
Shape	Round (for round conductor)
for cable diameter	16 mm
For nail diameter	2,0x40
Hardened	yes
Halogen-free	yes
With nail	yes
Nail length	40 mm
ROHS-conformant	yes
Impact-resistant	no
Transparent	no
Pipe locking	no