Technical data sheet

ISO nail clip 2018, white

Item number: 2226308



ISO nail clip, short design

HALOGEN FREE CE

PP Polypropylene

Master data

Item number	2226308
Type	2018 40 RW
Description 1	ISO nail clip
Manufacturer	OBO
Dimension	18mm, L40
Colour	Pure white; RAL 9010
Material	Polypropylene
Smallest sales unit	25
Unit of quantity	Piece
Weight	0.548 kg
Weight unit	kg/100 pc.
CO2 Footprint (GWP) Cradle-to-Gate	0,0127 kg CO2e / 1 Piece

Technical data sheet

ISO nail clip 2018, white

Item number: 2226308

Dimensions

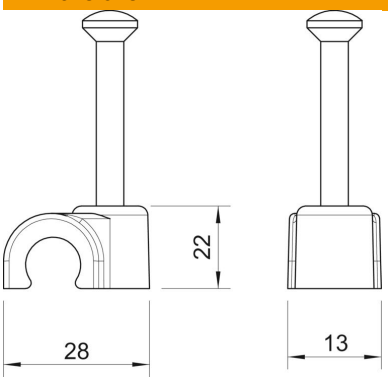

Dimension B	13 mm
Dimension H	22 mm
Dimension L	28 mm

Technical data

Double clip	no
Shape	Round (for round conductor)
for cable diameter	18 mm
For nail diameter	2,0x40
Hardened	yes
Halogen-free	yes
With nail	yes
Nail length	40 mm
ROHS-conformant	yes
Impact-resistant	no
Pipe locking	no