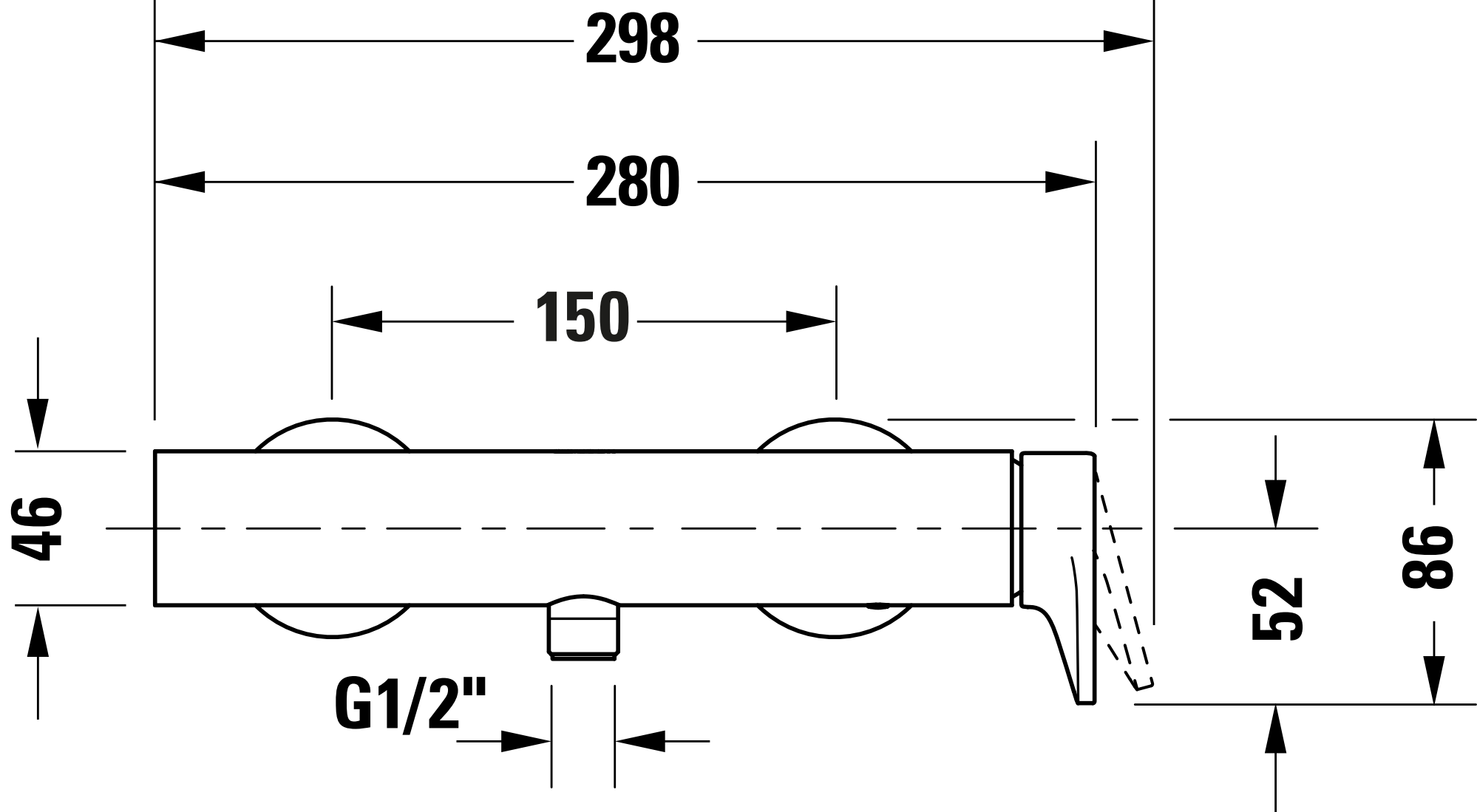
298
280
150
46
52
86
G1/2"