Flush mounting box with spring clips

390-20057

4 year warranty

Flush-mounting box with spring clips for ceiling mounting of detectors
:

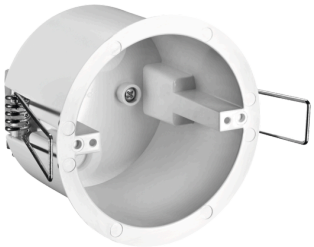

Technical data

Flush-mounting box with spring clips for ceiling mounting of detectors
:
Flush-mounting box for ceiling mounting of detectors. Provided with spring clips for easy mounting in false ceilings. • • : • • • • • • : • : • : • :
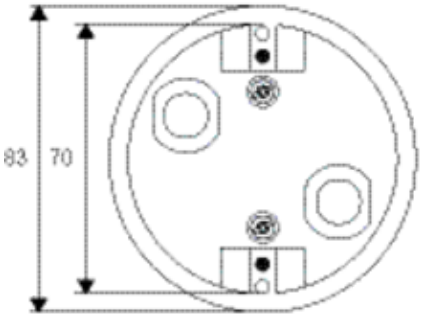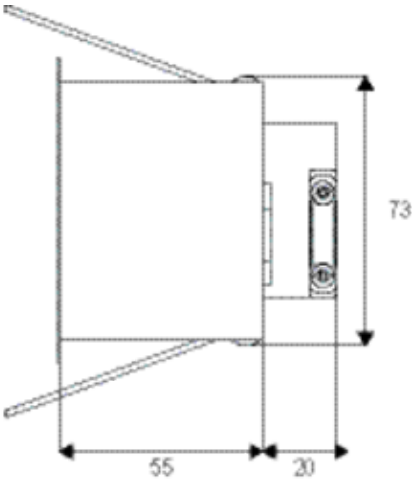
Dimensions