Read these instructions & save for future use

Wall light | 251*167mm | 7W | IP65 | 2700-3000K

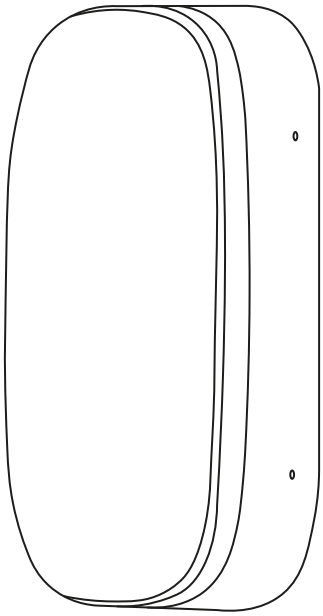

Article number	**136-240**
Brand	**Tronix Lighting**
Type	**Wall lights**
Contents of this product	**1x 7W wall light 2700-3000K**
Technical datasheet	**Digitally available on our webshop**

View instructions and technical data also on our website

TRONIX

Before first use

Before getting started with this product, it is advisable to check the order completeness and any damage. If this is the case, please contact Tronix Lighting.

Description

Made of high-quality aluminum and plastic, this sturdy wall lamp is ideal for outdoor use. The wall light is easily adjusted to your liking using the switch for different color temperatures. Perfect for lighting tunnels, galleries or a garage.

Features

- ADC12 aluminum housing with good heat dissipation;
- IP65 waterproof;
- CCT-2 switch: adjustable in 2700K and 3000K by dip-switch in the fixture.

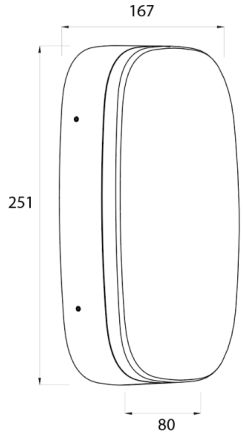

Installation

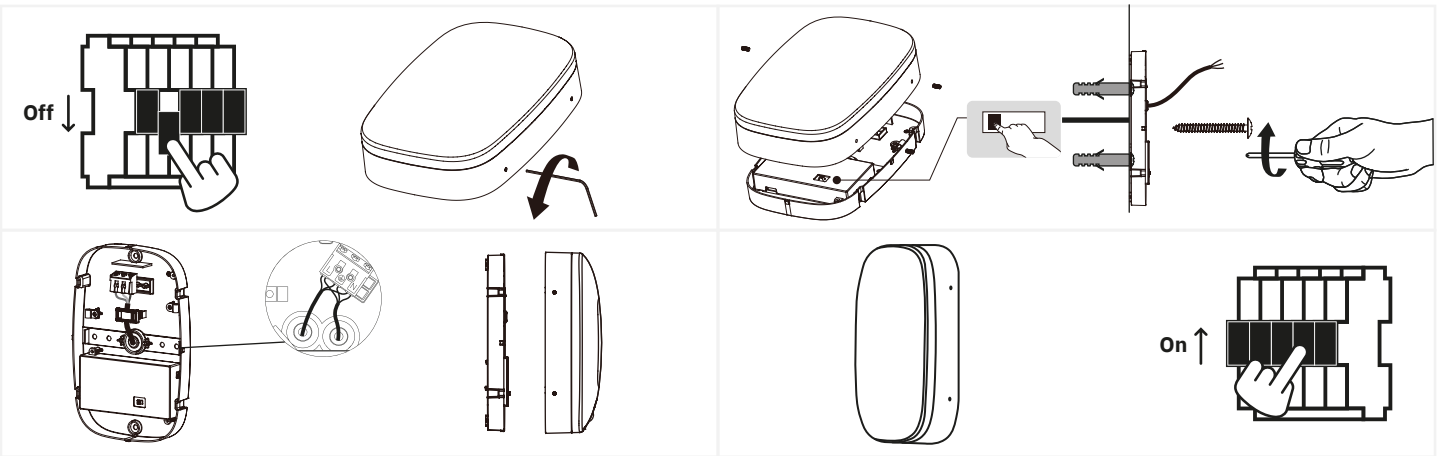

1. Turn off the power and remove the product and accompanying parts from the packaging. Then detach the shade and prepare the wall by drilling holes;
2. Disassemble the lamp. Use the switch inside the lamp to select the desired color temperature, then attach the plate to the wall;
3. Install the wiring (one set of cables for direct switching, additional set of cables for looping power). Reassemble the lamp when the back is properly assembled;
4. Check the installation of the wall lamp. Activate the power when OK to complete the installation.

Safety

Safety is a top priority at Tronix Lighting. Therefore, we heartily recommend that you follow the following steps closely:

- Keep this manual carefully for future reference;
- Choose a qualified electrician while installing, maintaining or inspecting this product;
- Never look directly into a light source to avoid possible eye damage;
- Ensure that the respective power group is always on non-active when the product is connected;
- Use only recommended combinations (LED drivers, controllers or dimmers) to avoid injury or damage to the product;
- The light source of this light is not replaceable. Because of this, you must replace the entire fixture towards the end of its lifespan and it is not recommended to open it.

Technical problems and repair

Should a product not work properly after installation, or if the product exhibits problems over time, it is advisable to check the following elements:

- Check the wiring and installation of your product;
- Check for the presence of interfering elements such as dust, water or other electronics;
- If possible, try disconnecting the product and testing it in another location to rule out a problem at the location;
- Should you be dealing with a WIFI-based product, check and reset your router's settings.

Should the product still not work after testing, it is recommended to send it in for inspection and/or repair. To do so, please contact Tronix Lighting using nearby details and proof of purchase (packing slip).

CARE SHARE CONNECT

Supplier:

Tronix Lighting B.V

Vluchtoord 41
5406 XP Uden, Netherlands

+31 (0)413 330 380
sales@tronixlighting.com

Terms and symbols (as relevant to product)

The **CE mark** indicates that this product complies with EU regulations on safety, health and environmental protection;

The **WEEE symbol** stands for "Waste Electrical and Electronic Equipment Regulation," a directive on the collection, recycling and recovery of electronic waste;

The **Class I symbol** indicates that this product is protected by means of the additional ground cable. This cable is identified by the yellow/green jacket and is attached to this product.

- This product has an **IP65 rating**. This means the housing is touch-safe, fully protected from dust and spray-proof (12.5 L/min) regardless of angle.