Technical data sheet

ISO nail clip 2009, pure white

Item number: 2225719



ISO nail clip, short design.

HALOGEN FREE CE

PP Polypropylene

Master data

Item number	2225719
Type	2009 25 RW
Description 1	ISO nail clip
Manufacturer	OBO
Dimension	9mm, L25
Colour	Pure white; RAL 9010
Material	Polypropylene
Smallest sales unit	100
Unit of quantity	Piece
Weight	0.107 kg
Weight unit	kg/100 pc.
CO2 Footprint (GWP) Cradle-to-Gate	0,0038 kg CO2e / 1 Piece

Technical data sheet

ISO nail clip 2009, pure white

Item number: 2225719

Dimensions

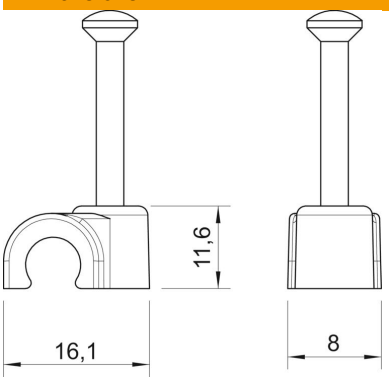

Dimension B	8 mm
Dimension H	11.6 mm
Dimension L	16.1 mm

Technical data

Double clip	no
Shape	Round (for round conductor)
for cable diameter	9 mm
For nail diameter	2,0x25
Hardened	yes
Halogen-free	yes
With nail	yes
Nail length	25 mm
ROHS-conformant	yes
Impact-resistant	no
Pipe locking	no