Technical data sheet

ISO nail clip 2012, white

Item number: 2226014



ISO nail clip, short design

HALOGEN FREE CE

PP Polypropylene

Master data

Item number	2226014
Type	2012 25 RW
Description 1	ISO nail clip
Manufacturer	OBO
Dimension	12mm, L25
Colour	Pure white; RAL 9010
Material	Polypropylene
Smallest sales unit	100
Unit of quantity	Piece
Weight	0.145 kg
Weight unit	kg/100 pc.
CO2 Footprint (GWP) Cradle-to-Gate	0,0053 kg CO2e / 1 Piece

Technical data sheet

ISO nail clip 2012, white

Item number: 2226014

Dimensions

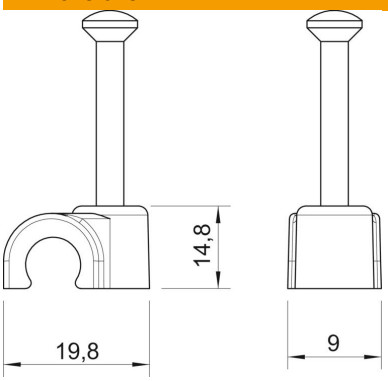

Dimension B	9 mm
Dimension H	14.8 mm
Dimension L	19.8 mm

Technical data

Double clip	no
Shape	Round (for round conductor)
for cable diameter	12 mm
For nail diameter	2,0x25
Hardened	yes
Halogen-free	yes
With nail	yes
Nail length	25 mm
ROHS-conformant	yes
Impact-resistant	no
Pipe locking	no