Technical data sheet

ISO nail clip 2006, light grey

Item number: 2227371



ISO nail clip, short design

HALOGEN FREE CE

PP Polypropylene

Master data

Item number	2227371
Type	2006 35 LGR SP
Description 1	ISO nail clip
Description 2	large packaging
Manufacturer	OBO
Dimension	6mm, L35
Colour	Light grey; RAL 7035
Material	Polypropylene
Smallest sales unit	200
Unit of quantity	Piece
Weight	0.113 kg
Weight unit	kg/100 pc.
CO2 Footprint (GWP) Cradle-to-Gate	0,0033 kg CO2e / 1 Piece

Technical data sheet

ISO nail clip 2006, light grey

Item number: 2227371

Dimensions

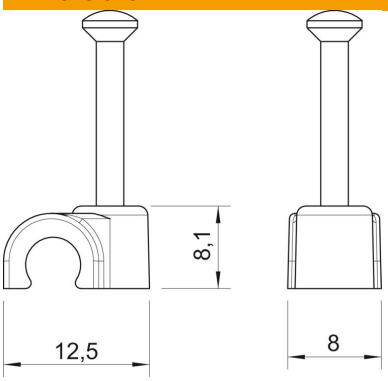

Dimension B	8 mm
Dimension H	8.1 mm
Dimension L	12.5 mm

Technical data

Double clip	no
Shape	Round (for round conductor)
for cable diameter	6 mm
For nail diameter	2,0x35
Hardened	yes
Halogen-free	yes
With nail	yes
Nail length	35 mm
ROHS-conformant	yes
Impact-resistant	no
Transparent	no
Pipe locking	no