Technical data sheet

ISO nail clip 2012, light grey

Item number: 2232842



ISO nail clip, short design

HALOGEN FREE CE

PP Polypropylene

Master data

Item number	2232842
Type	2012 45 LGR SO
Description 1	ISO nail clip
Manufacturer	OBO
Dimension	12mm, L45
Colour	Light grey; RAL 7035
Material	Polypropylene
Smallest sales unit	150
Unit of quantity	Piece
Weight	0.19 kg
Weight unit	kg/100 pc.
CO2 Footprint (GWP) Cradle-to-Gate	0,0058 kg CO2e / 1 Piece

Technical data sheet

ISO nail clip 2012, light grey

Item number: 2232842

Dimensions

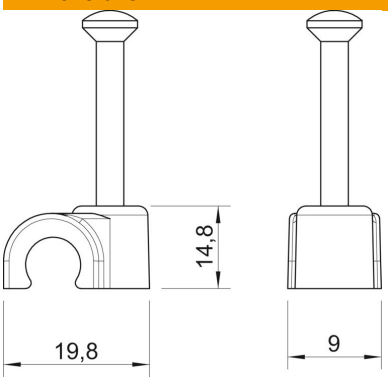

Dimension B	9 mm
Dimension H	14.8 mm
Dimension L	19.8 mm

Technical data

Double clip	no
Shape	Round (for round conductor)
for cable diameter	12 mm
For nail diameter	2,0x45
Hardened	yes
Halogen-free	yes
With nail	yes
Nail length	45 mm
ROHS-conformant	yes
Impact-resistant	no
Transparent	no
Pipe locking	no