Technical data sheet

ISO nail clip 2006, white

Item number: 2225409



ISO nail clip, short design

HALOGEN FREE CE

PP Polypropylene

Master data

Item number	2225409
Type	2006 18 RW
Description 1	ISO nail clip
Manufacturer	OBO
Dimension	6mm, L18
Colour	Pure white; RAL 9010
Material	Polypropylene
Smallest sales unit	100
Unit of quantity	Piece
Weight	0.075 kg
Weight unit	kg/100 pc.
CO2 Footprint (GWP) Cradle-to-Gate	0,0028 kg CO2e / 1 Piece

Technical data sheet

ISO nail clip 2006, white

Item number: 2225409

Dimensions

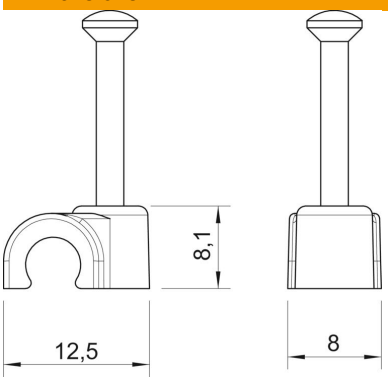

Dimension B	8 mm
Dimension H	8.1 mm
Dimension L	12.5 mm

Technical data

Double clip	no
Shape	Round (for round conductor)
for cable diameter	6 mm
For nail diameter	2,0x18
Hardened	yes
Halogen-free	yes
With nail	yes
Nail length	18 mm
ROHS-conformant	yes
Impact-resistant	no
Pipe locking	no